MD50, MD50-R and MD50-E Actuator

with Two-Way/Three-Way Valve of the RBK.. Series

Application

Elektric actuator for 3-point or modulating controllers in heating systems.

Positive connection with automatic coupling between actuator and compact control valve.

Contents **Page**

Kieback&Peter GmbH & Co. KG
Tempelhofer Weg 50, 12347 Berlin/Germany
Telefon: +49 30 60095-0, Telefax: +49 30 60095-164
www.kieback-peter.de, info@kieback-peter.com

Important Information on Product Safety

Safety instructions

This data sheet contains information on installing and commissioning the product “MD50, MD50-R and MD50-E Actuator”. Each person who carries out work on this product must have read and understood this data sheet. If you have any questions that are not resolved by this data sheet, you can obtain further information from the supplier or manufacturer.

If the product is not used in accordance with this data sheet, the protection provided will be impaired.

Applicable regulations must be observed when installing and using the device. Within the EU, these include regulations regarding occupational safety and accident prevention as well as those from the VDE (German Association for Electrical, Electronic & Information Technologies). If the device is used in other countries, it is the responsibility of the plant engineer or operator to comply with local regulations.

Mounting, installation and commissioning work on the devices may only be carried out by qualified technicians. Qualified technicians are persons who are familiar with the described product and who can assess given tasks and recognize possible dangers due to technical training, knowledge and experience as well as knowledge of the appropriate regulations.

Meaning of the symbols

WARNING

Indicates a hazard of medium risk which can result in death or serious bodily injury if it is not avoided.

CAUTION

Indicates a hazard of low risk which can result in minor or medium bodily injury if it is not avoided.

NOTICE

Indicates a hazard which can result in material damage or malfunctions if it is not avoided.

NOTE

Indicates additional information that can simplify the work with the product for you.

Notes on disposal

For disposal purposes, the product is considered waste from electrical and electronic equipment (electronic waste) and must not be disposed of as household waste. Special handling of specific components may be legally binding or ecologically sensible. The local and currently applicable legislation must be observed.

Item

MD50	Actuator for two-way and three-way valves of the RBKxx compact valve series
MD50-R	Like MD50, with additional positioning feedback
MD50-E	Like MD50, with additional positioning feedback and auxiliary switch

Technical Data

Nominal voltage	MD50; MD50-R; MD50-E AC 24 V ±10%; 50/60 Hz; DC 24 V ±10%
Power consumption	Dimensioning: MD50; MD50-R 6 VA (AC 24 V); 2.6 W (DC 24 V) MD50-E 6.2 VA (AC 24 V) 2.8 W (DC 24 V) Operation: MD50; MD50-R 2.1 VA (AC 24 V); 0.7 W (DC 24 V) MD50-E 2.6 VA (AC 24 V); 1.0 W (DC 24 V)
Control	3-point signal (Open/Stop/Closed) or continuous control DC 0(2) to 10 V; < 0.5 mA, invertible
Connection	Built-in cable MD50: 1.5 m; 3 x 0.34 mm^2 MD50-R: 1.5 m; 5 x 0.25 mm^2 MD50-E: 1.5 m; 5 x 0.25 mm^2 and 1.5 m; 2 x 0.5 mm^2
Motor switch-off	Actuator spindle: extending = electronic, retracting = electronic
Display	LED display for operating voltage and status
Actuating noise	<30 dB (A)
Nominal stroke	10 mm max.
Travel time	22 s/mm
Positioning force	500 N
Position indicator	Stroke range scale
Positioning feedback	Only with MD50-R and MD50-E DC 0 V to 10 V, 5 mA for 0 to 100% nominal stroke; invertible
Auxiliary switch	Only with MD50-E: 1 voltage-free normally open contact, AC 250 V max.; 2 A adjustable switching point
Manual adjustment	Only when disconnected from the mains power supply Socket for hexagon key on the actuator cover, key socket 4 mm
Valve block protection	Can be switched on
Charact. curve compensation	Can be switched on
Ambient temp.	0 °C to 50 °C
Degree of protection	IP40
Protection class	MD15; MD15-R III in accordance with EN 60730 MD15-E II in accordance with EN 60730
Installation position	Anywhere from vertical to horizontal
Maintenance	Maintenance-free
Weight	200 g

Dimensions

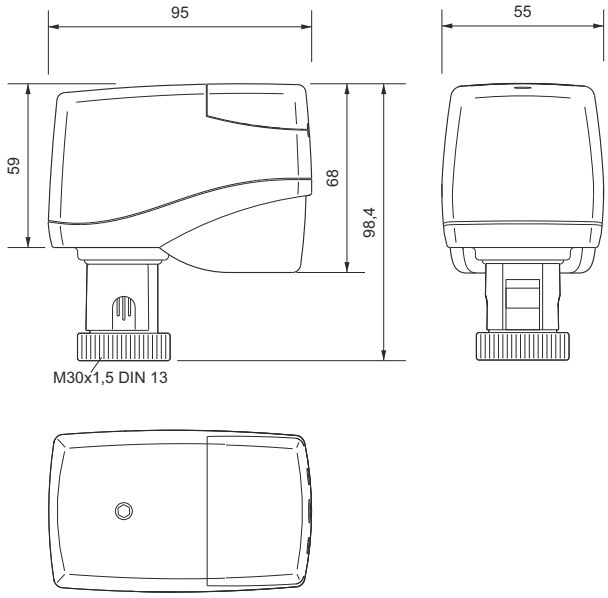

Connection

- Continuous control

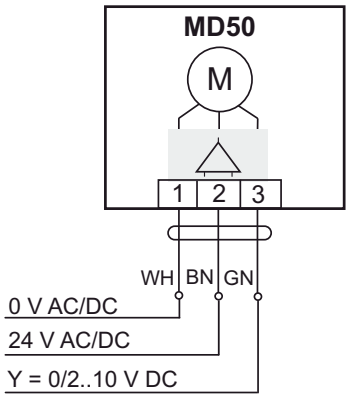

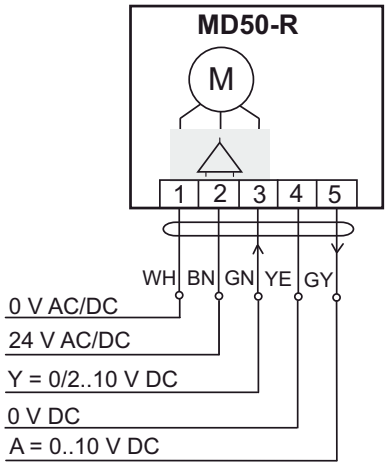

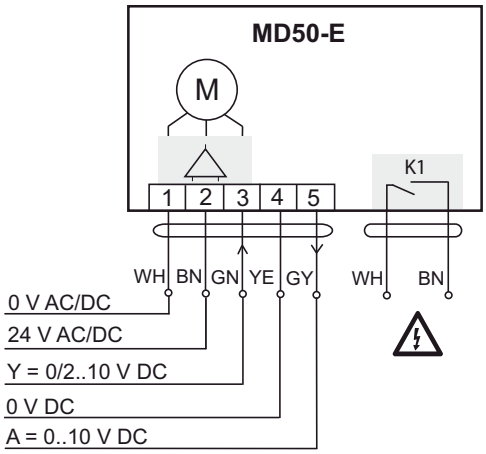

- 3-point control

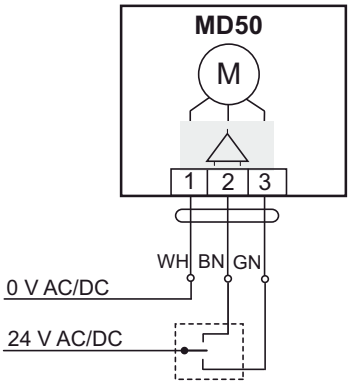

NOTE

The actuation direction can be changed by switching the supply lines to terminals 2 and 3 on the actuator.

RBK15 to 50(-BK)MD50 Compact Three-Way/Two-Way Valves with Actuator

Application

The RBKxx compact gunmetal three-way valves and two-way valves with MD50 actuator are used for fine mixing of liquids.
The valves are installed as two-way valves using the BK blank cover on gate B.
A 3-point or continuous Y signal of DC 0(2) to 10 V is used for control.

Types

RBK.. compact gunmetal three-way valve with MD50 actuator for water up to 120 °C, 16 bar

	DN	PN	Kvs	Δp (bar)	Travel time (s)	Connec-tion	Weight (kg)
RBK15/0,63MD50	15	16	0.63	12.1	220	G 1 1/8	1.26
RBK15/1,0MD50	15	16	1.0	12.1	220	G 1 1/8	1.26
RBK15/1,6MD50	15	16	1.6	12.1	220	G 1 1/8	1.26
RBK15/2,5MD50	15	16	2.5	12.1	220	G 1 1/8	1.26
RBK20/4,0MD50	20	16	4.0	9.2	220	G 1 1/4	1.36
RBK20/6,3MD50	20	16	6.3	9.2	220	G 1 1/4	1.36
RBK25/6,3MD50	25	16	6.3	5.0	220	G 1 1/2	1.58
RBK25/8,0MD50	25	16	8.0	5.0	220	G 1 1/2	1.58
RBK25/10,0MD50	25	16	10.0	5.0	220	G 1 1/2	1.58
RBK32/10,0MD50	32	16	10.0	3.5	220	G 2	2.12
RBK32/16,0MD50	32	16	16.0	3.5	220	G 2	2.12
RBK40MD50	40	16	25.0	1.5	220	G 2 1/4	2.54
RBK50MD50	50	16	35.0	0.7	220	G 2 3/4	3.70

RBK..-BK compact gunmetal two-way valve with MD50 actuator for water up to 120 °C, 16 bar

	DN	PN	Kvs	Δp (bar)	Travel time (s)	Connec-tion	Weight (kg)
RBK15/0,63-BKMD50	15	16	0.63	12.1	220	G 1 1/8	1.37
RBK15/1,0-BKMD50	15	16	1.0	12.1	220	G 1 1/8	1.37
RBK15/1.6-BKMD50	15	16	1.6	12.1	220	G 1 1/8	1.37
RBK15/2.5-BKMD50	15	16	2.5	12.1	220	G 1 1/8	1.37
RBK20/4,0-BKMD50	20	16	4.0	9.2	220	G 1 1/4	1.49
RBK20/6,3-BKMD50	20	16	6.3	9.2	220	G 1 1/4	1.49
RBK25/6,3-BKMD50	25	16	6.3	5.0	220	G 1 1/2	1.74
RBK25/8,0-BKMD50	25	16	8.0	5.0	220	G 1 1/2	1.74
RBK25/10,0-BKMD50	25	16	10.0	5.0	220	G 1 1/2	1.74
RBK32/10,0-BKMD50	32	16	10.0	3.5	220	G 2	2.40
RBK32/16,0-BKMD50	32	16	16.0	3.5	220	G 2	2.40
RBK40-BKMD50	40	16	25.0	1.5	220	G 2 1/4	2.89
RBK50-BKMD50	50	16	35.0	0.7	220	G 2 3/4	4.20

Accessories

Not included in delivery.

Two Z... fittings are required for RBK15..50-BK two-way valves and three Z... fittings for RBK15..50 three-way valves.

Z210	Female thread fitting DN15
Z211	Female thread fitting DN20
Z212	Female thread fitting DN25
Z213	Female thread fitting DN32
Z214	Female thread fitting DN40
Z215	Female thread fitting DN50

Technical data: RBK..(BK) valves

Nominal diameter	DN15 to 50 (G 1 1/8 to G 2 3/4)	
Pressure rating	PN 16	
Connection	Male thread ISO 228/1	
Characteristic curve	RBK..	Gates A → AB = same percentage up to DN32 Gates A → AB = linear DN40 and up Gates B → AB = linear
	RBK..-BK	Gates A → AB = same percentage up to DN32 Gates A → AB = linear DN40 and up
Nominal stroke	RBK15..50(-BK): 10 mm	
Leak rate	in accordance with EN 1349; leakage class I; 0.05% from Kvs value	
Medium temperature	0 to 120 °C	
Housing	Gunmetal, CC491K	
Cone	Brass CW614N	
Valve spindle	CrMo steel 1.4021	
Spindle seal	EPDM O-rings, maintenance-free	
Pipe connections	Female thread fittings and GTW union nuts (malleable iron, yellow chromated)	
Blank cover	GTW union nut (malleable iron, yellow chromated) Steel gasket, yellow chromated	

Dimensions

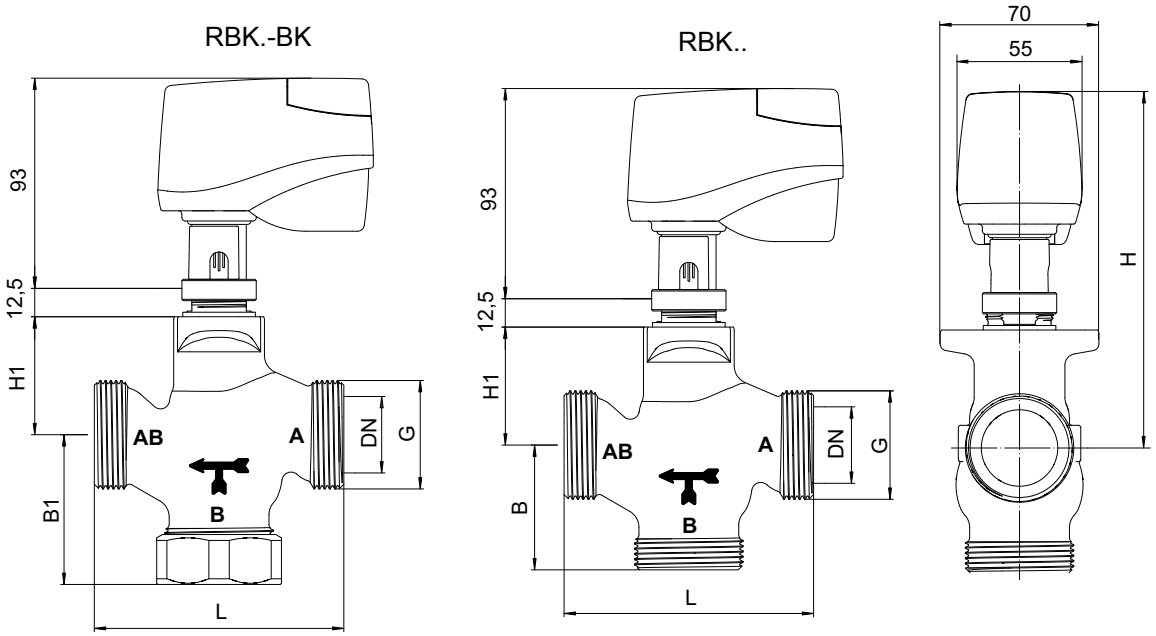

Version RBK .. -BK (two-way valve) with blank cover on gate B

DN	H1	B	B1	L	H	G
15	46	55	65	80	152	G 1 1/8
20	46	55	65	90	152	G 1 1/4
25	52	55	66	110	158	G 1 1/2
32	56	55	67	120	162	G 2
40	65	60	72	130	171	G 2 1/4
50	65	65	77	150	171	G 2 3/4
	Dimensions H1 to H in mm, connection threads G in inches					

Valve Installation

NOTICE

The valve may only be installed by qualified technicians. In addition to the generally applicable installation guidelines, the following items are to be observed:

- The pipeline system and the fixture interior must be free of foreign objects. In the event of contaminated media, dirt collectors are to be inserted upstream of the valves with fine screens, mesh width 0.25 mm.
- There must be no tension between the valve and the pipeline connection.
- To avoid eddy formations in the valve body, the valve should be installed in a straight section of the pipe. A distance of 10 times the nominal diameter is recommended between the valve flange and manifold or other similar parts.
- The installation location is to be selected so that the ambient temperature at the actuator is kept between 0 °C–+50°C.
- When carrying out installation, the permissible max. pressure difference Δp and the specified direction of flow must be observed (see table in "Types" section, as well as the "Valve Principle").
- The three-way valves are to be used as mixing valves. Pay attention to the direction of flow (see fig. "Valve Principle").
- Once the valve is installed, make sure the ball in the valve seating can be moved easily by pushing in the valve stem.
- To install the actuator and remove the housing cover, approx. 120 mm of free space is required above the actuator.
- For safety reasons, do not suspend the small actuators under the valve.
- Observe the direction arrow on the valve body. Inverting the direction of flow impairs control behavior.

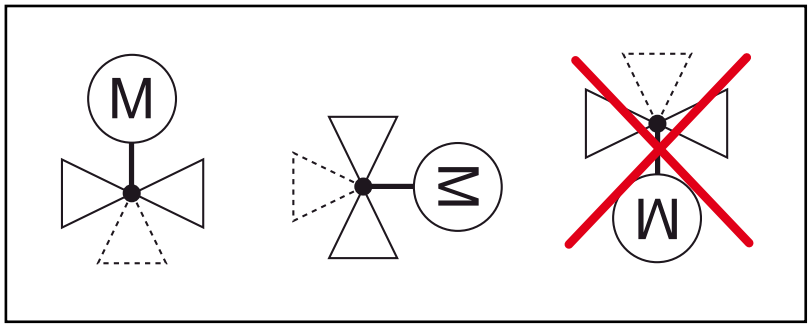

Valve Cross-Sections with Flow Directions

Two-way valve

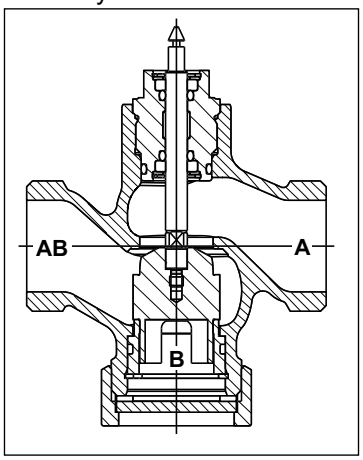

RBK..-BK

Three-way valve

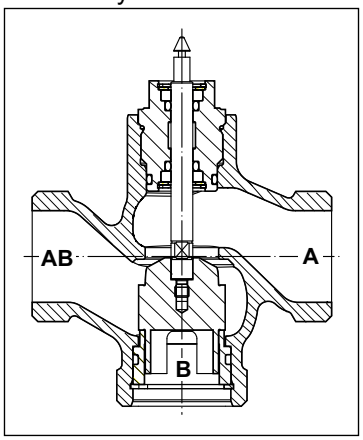

RBK..

Actuator Installation

CAUTION

Installation and commissioning work may only be carried out by qualified technicians.

If the valve is installed in the plant, ensure that no differential pressure builds up in the valve body before beginning work. If necessary, close the gate valve and switch off pumps. After the pipeline has cooled off, the actuator can be installed.

Be sure to comply with VDE guidelines and local wiring regulations. The device must be connected according to the binding wiring diagram.

NOTICE

MD50, MD50-R and MD50-E Actuator must not be operated electrically without a valve.

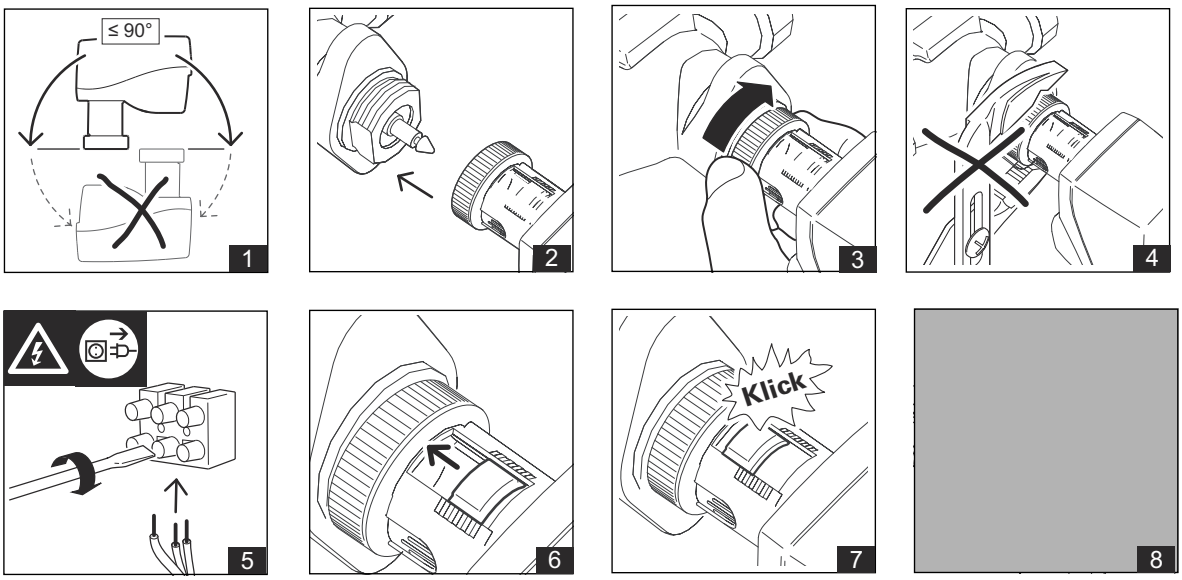

- Place the actuator on the threaded connection of the valve and tighten hand-tight with the union nut.
- Establish the electrical connection.
- After the mains power supply has been switched on, an automatic initialization run takes place. The actuator moves into upper end position. Adaptation of the valve takes place at Y = 10 V or 24 V on lead "GN" at 3-point operation.
- After installation and commissioning work is complete, the automatic coupling must be protected with the dust cover (see fig. 7).

Removal of the Actuator

CAUTION

Before beginning to remove the unit, make sure that no differential pressure builds up in the valve body before beginning work. If necessary, close the gate valve and switch off the pumps.

After the pipeline has cooled off, you can begin with the removal of the actuator.

NOTICE

Before beginning to remove the unit, put the actuator in the middle position.

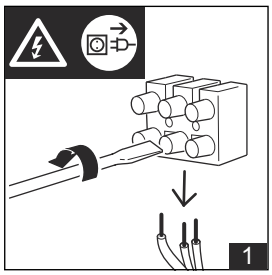

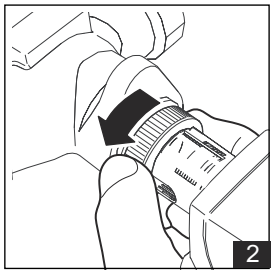

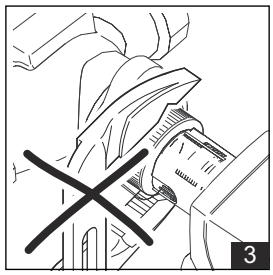

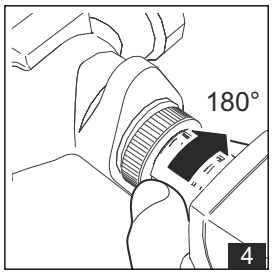

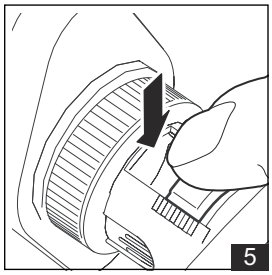

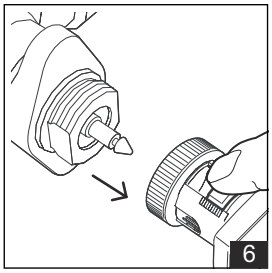

- Disconnect the actuator from the mains power supply. Then disconnect all electrical connections.
- Remove the union nut.
- Turn the dust cover far enough so that you can press the safety button.
- Push the safety button of the automatic coupling as far as it will go and hold down (see fig. 5).
- Remove the actuator from the valve.

Manual adjustment

NOTICE

Manual adjustment may only be performed when the actuator is installed.

- The actuator must be disconnected from the mains power supply for manual operation.
- Using a hexagon key (key socket 4 mm), the actuator can be moved into any position.

Commissioning

Valve Functions

The valve functions are adjusted with switches (A) 1 to 6 under the connection cover.

Function	Switch (A)	Function
No function	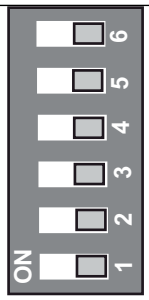	No function
Switching position auxiliary switch active		Switching position auxiliary switch inactive
Characteristic curve compensation On		Characteristic curve compensation Off
Actuating direction and positioning feedback 100% to 0%		Actuating direction and positioning feedback 0% to 100%
DC 2 V to 10 V		DC 0 V to 10 V
Valve block protection On		Valve block protection Off

Switch 1: Valve block protection
If the plant specifications permit it, the valve block protection can be activated during commissioning.
Block protection prevents the ball from jamming when the valve is not moved for a longer period of inactivity, e.g. for heating systems during the summer.
When the block protection is activated, the valve cone is raised for a few seconds if no stroke movement has occurred in a period of 24 hours.

Factory setting: Off

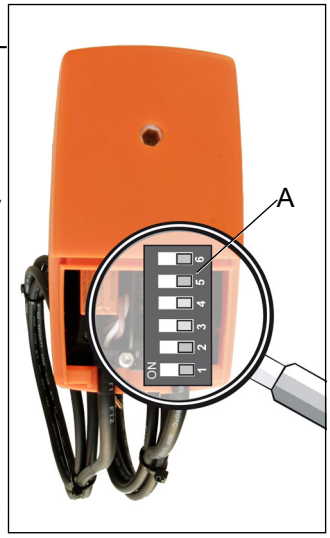

Switch 2: Setting of the control range by the continuous actuating signal DC 0 V to 10 V or DC 2 V to 10 V

Factory setting: DC 0 V to 10 V

Switch 3: Setting of the actuating direction with DC 10 V control voltage "valve open" or "valve closed" and position feedback

Factory setting: 0% to 100%; "valve open"

Switch 4: Setting of the characteristic curve compensation On or Off. When characteristic curve compensation is activated, an equal percentage characteristic curve is generated for valves with linear characteristic curve in the control path A → AB.

Factory setting: Off

Switch 5 (only with MD50-E): Setting of the auxiliary switch position
The switch-on point of the auxiliary switch can be set to any position of the nominal stroke.
The switching process is triggered when the set value is not reached. It remains closed as long as the value remains exceeded.
To do so, put the actuator in the desired position using the control signal DC 0(2) V to 10 V. Then change switch 5 from the “inactive” position to the “active” position. This sets the switch-on point.

Factory setting: Inactive

NOTE

If the actuator is controlled with a 3-point actuating signal, the only valve function in effect is the setting of the actuating direction “valve open” or “valve closed” (switch 3).