MD15/230-HR, MD15/230-HE and MD15/230-DA Small Actuators

for R15xx, R20xx, RW15x Valves and Danfoss of the Series RA

Application

Small actuator for 3-point control in zone post-treatment devices for heating, ventilation and air conditioning systems.

Positive connection with automatic coupling.

Content Page

Kieback&Peter GmbH & Co. KG
Tempelhofer Weg 50, 12347 Berlin/Germany
Telefon: +49 30 60095-0, Telefax: +49 30 60095-164
www.kieback-peter.de, info@kieback-peter.com

Important Information Regarding Product Safety

Safety Instructions

This data sheet contains information on installing and commissioning the product "MD15/230-HR, MD15/230-HE und MD15/230-DA". Each person who carries out work on this product must have read and understood this data sheet. If you have any questions that are not resolved by this data sheet, you can obtain further information from the supplier or manufacturer.

If the product is not used in accordance with this data sheet, the protection provided will be impaired.

Applicable regulations must be observed when installing and using the device. Within the EU, these include regulations regarding occupational safety and accident prevention as well as those from the VDE (Association for Electrical, Electronic & Information Technologies). If the device is used in other countries, it is the responsibility of the system installer or operator to comply with local regulations.

Mounting, installation and commissioning work on the devices may only be carried out by qualified technicians. Qualified technicians are persons who are familiar with the described product and who can assess given tasks and recognize possible dangers due to technical training, knowledge and experience as well as knowledge of the appropriate regulations.

Legend

WARNING

Indicates a hazard of medium risk which can result in death or severe bodily injury if it is not avoided.

CAUTION

Indicates a hazard of low risk which can result in minor or medium bodily injury if it is not avoided.

CAUTION

Indicates a hazard of medium risk which can result in material damage or malfunctions if it is not avoided.

NOTE

Indicates additional information that can simplify the work with the product for you.

Notes on Disposal

For disposal, the product is considered waste from electrical and electronic equipment (electronic waste) and must not be disposed of as household waste. Special treatment for specific components may be legally binding or ecologically sensible. The local and currently applicable legislation must be observed.

Item

MD15/230-HE	Small actuator for R15xx, R20xx and RW15x radiator valves and other valves with an M30x1.5 connection that were manufactured by Heimeier, Honeywell-MNG, Junkers, Honeywell-Baukmann, Oventrop (2001 and later) and Cazzaniga
MD15/230-DA	Small actuator for radiator valves that were manufactured by Danfoss of the RA-N, RA-FN or RA-U series
MD15/230-HR	Small actuator for valve series R15/x andRW15/x (manufacturer Hora, series 216Z and316Z) that were discontinued in 11-2015

Technical Data

Nominal voltage	AC 230 V ±10%; 50/60 Hz; 2.5 VA
Control	3-point signal (Open/Stop/Closed)
Connection	Built-in cable: 1.5 m, 3 x 0.34 mm^2
Motor switch-off	Actuator spindle: extending = load-dependant, retracting = load-dependant
Display	LED display for operating voltage and status
Actuating noise	<31 dB
Nominal stroke	MD15/230-HR 9 mm; MD15/230-HE and MD15/230-DA 3 mm
Travel time	15 s/mm
Positioning force	MD15/230-HR nominal 200 N; MD15/230-HE and MD15/230-DA nominal 100 N
Position indication	Stroke range scale
Manual adjustment	Only when disconnected from the mains power supply Socket for hexagon key on the actuator cover, key socket 4 mm
Ambient temp.	0 °C to 50 °C (non-condensing)
Degree of protection	IP40
Protection class	II in accordance with EN 60730
Installation position	Anywhere from vertical to horizontal
Maintenance	Maintenance-free
Weight	180 g

Dimensions

- MD15/230-HR and MD15/230-HE

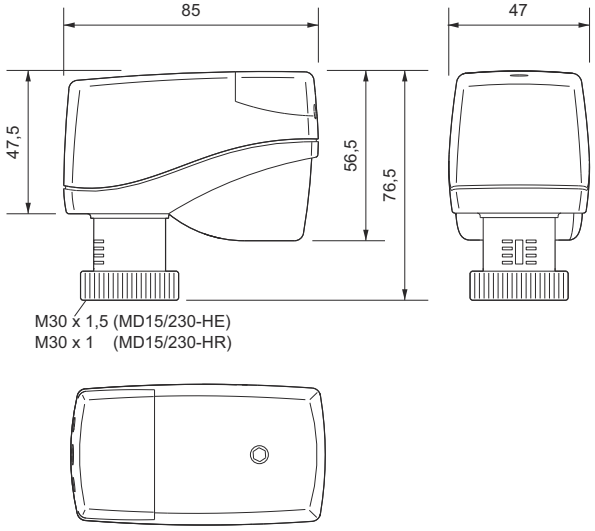

-MD15/230-DA

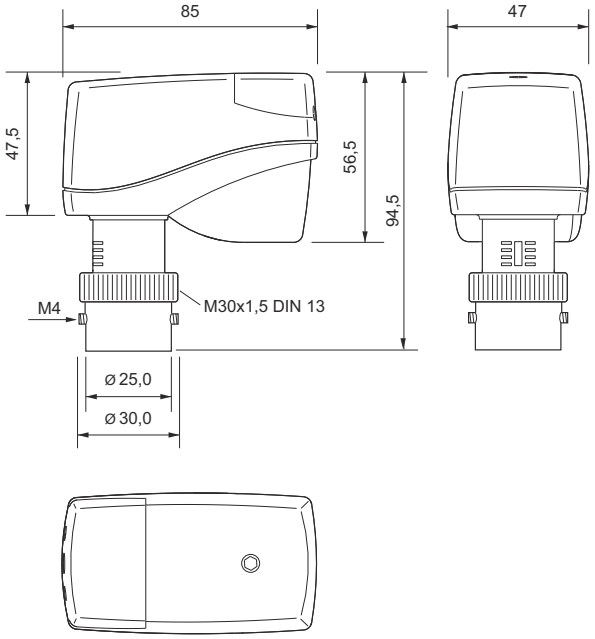

Connection

- 3-point control

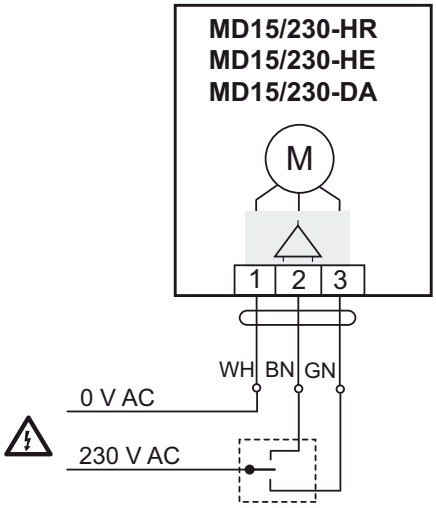

CAUTION

A 1 A pre-fuse is required to operate the small actuator.

NOTE

The actuation direction can be changed by switching the supply lines to terminals 2 and 3 on the actuator.

R15xx, R20xx and RW15xx Two-Way/Three-Way Valve for Small Actuator MD15/230-HE

Types

PN10 gunmetal two-way valve for water up to 120 °C

	Type	DN	PN	kvs	R
Straight-through flow	R10D	10	10	1.25	3/8"
	R15D	15	10	1.35	1/2"
	R20D	20	10	2.5	3/4"
Flow through 90°	R10E	10	10	1.25	3/8"
	R15E	15	10	1.35	1/2"
	R20E	20	10	2.5	3/4"
Straight-through flow	R10DV	10	10	0.73	3/8"
with Kvs setting	R15DV	15	10	0.73	1/2"
	R20DV	20	10	0.73	3/4"
Flow through 90°	R10EV	10	10	0.73	3/8"
with Kvs setting	R15EV	15	10	0.73	1/2"
	R20EV	20	10	0.73	3/4"

PN10 gunmetal three-way valve for water up to 120 °C

	Type	DN	PN	kvs	R
Connection left	RW15L	10	10	1.45	1/2"
Connection right	RW15R	15	10	1.45	1/2"

Technical Data: Rxx and RWxx Valves

Nominal diameter	DN10 - 20
Pressure rating	PN10
Connection	Pipe screw connections in accordance with DIN EN 2115
Actuating stroke	2 mm
Temperature of medium	Water up to 120 °C
Housing	Gunmetal
Cone	EPDM
Valve spindle	Stainless steel
Spindle seal	EPDM
Maintenance	Maintenance-free

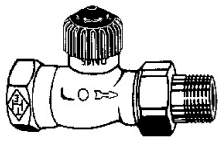

R10..20D, R10..20DV

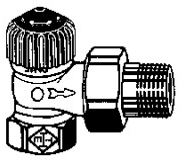

R10..20E, R10..20EV

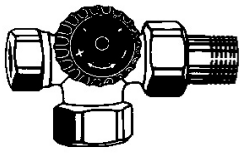

RW15L

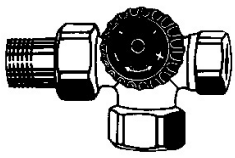

RW15R

Types

PN10 gunmetal two-way valve for water up to 120 °C

	Type	DN	PN	Kvs	R
Straight-through flow	R10D	10	10	1.25	3/8"
	R15D	15	10	1.35	1/2"
	R20D	20	10	2.5	3/4"
Flow through 90°	R10E	10	10	1.25	3/8"
	R15E	15	10	1.35	1/2"
	R20E	20	10	2.5	3/4"
Straight-through flow	R10DV	10	10	0.86	3/8"
with Kvs setting	R15DV	15	10	0.86	1/2"
	R20DV	20	10	0.86	3/4"
Flow through 90°	R10EV	10	10	0.86	3/8"
with Kvs setting	R15EV	15	10	0.86	1/2"
	R20EV	20	10	0.86	3/4"

PN10 gunmetal three-way valve for water up to 120 °C

	Type	DN	PN	Kvs	R
Connection left	RW15L	10	10	1.45	1/2"
Connection right	RW15R	15	10	1.45	1/2"

Technical Data: Rxx and RWxx Valves

Nominal diameter	DN10 - 20
Pressure rating	PN10
Connection	Pipe screw connections in accordance with DIN EN 2115
Actuating stroke	2 mm
Temperature of medium	Water up to 120 °C
Housing	Gunmetal; nickel-plated
Cone	EPDM
Valve spindle	Stainless steel
Spindle seal	EPDM
Maintenance	Maintenance-free

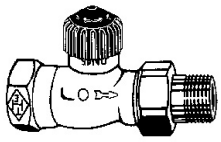

R10..20D, R10..20DV

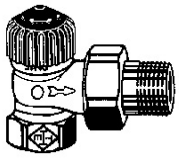

R10..20E, R10..20EV

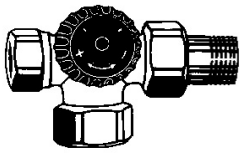

RW15L

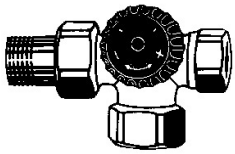

RW15R

Dimensions

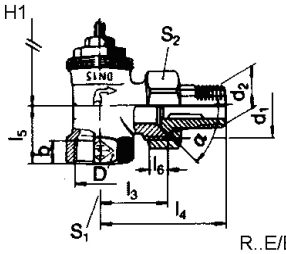

R..E/EV

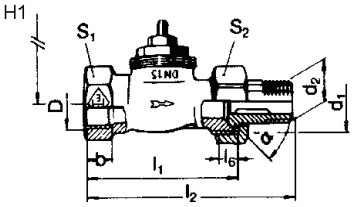

R..D/DV

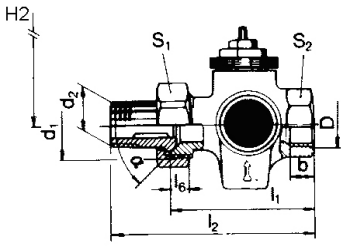

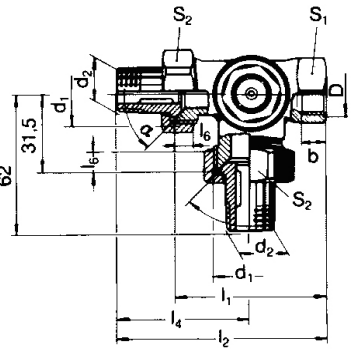

RW..L/R

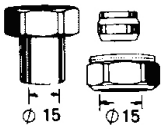

Kvs default setting for R10 - 20DV/EV valves

To adjust to the heat requirement, the R10 - 20DV/EV valves have 8 flow settings for the radiator mass flow rate.

The maximum flow rate, Kvs value (m³/h) can be selected by using the settings 1, 2, 3, 4, 5, 6, 7 or 8 (delivery setting = 8, corresponds to a Kvs value = 0.86).

The setting can be made using a Z29 socket key (accessory). The setting between 1 and 8 can be read from the valve, and will be implemented by the installed small actuator.

Position	1	2	3	4	5	6	7	8
Kvs value	0,049	0,102	0,185	0,313	0,420	0,565	0,740	0,860

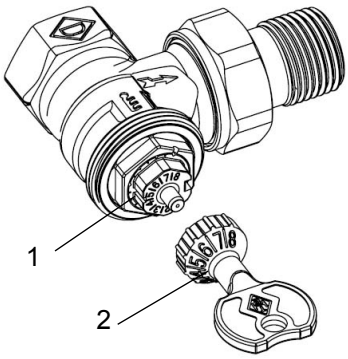

(1) Setting marks
(2) Z29 socket key (accessory)

Valve Installation

CAUTION

The valve may only be installed by qualified technicians. In addition to the generally applicable installation guidelines, the following items are to be observed:

- The pipeline system and the fixture interior must be free of foreign objects. In the event of contaminated media, dirt collectors are to be inserted upstream of the valves with fine screens, mesh width 0.25 mm.
- There must be no tension between the valve and the pipeline connection.
- To avoid eddy formations in the valve body, the valve should be installed in a straight section of the pipe. A distance of 10 times the nominal diameter is recommended between the valve flange and manifold or other similar parts.
- The installation location is to be selected so that the ambient temperature at the actuator is kept between 0 °C–+50°C.
- When carrying out installation, the permissible max. pressure difference Δp and the specified direction of flow must be observed (see table in "Types" section, as well as the "Valve Principle").
- The three-way valves are to be used as mixing valves. Pay attention to the direction of flow (see fig. "Valve Principle").
- Once the valve is installed, make sure the ball in the valve seating can be moved easily by pushing in the valve stem.
- To install the actuator and remove the housing cover, approx. 170 mm of free space is required above the actuator.
- For safety reasons, do not suspend the small actuators under the valve.
- Observe the direction arrow on the valve body. Inverting the direction of flow impairs control behavior.

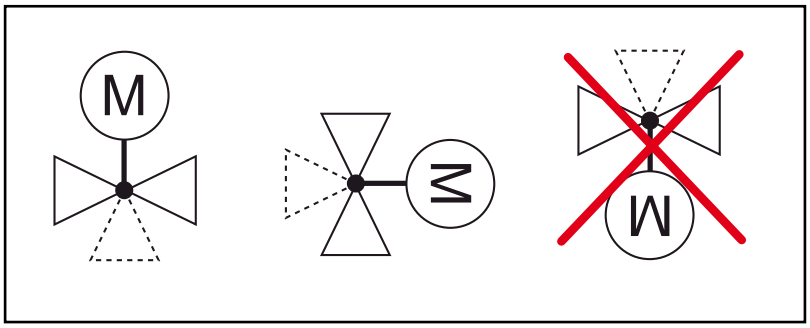

Installation and Commissioning of the Small Actuator

CAUTION

Installation and commissioning work may only be carried out by qualified technicians.

If the valve is installed in the system, make sure that no differential pressure builds up in the valve body before beginning work. If necessary, close the gate valve and turn off pumps. After the pipeline has cooled off, the actuator can be installed.

Be sure to comply with VDE guidelines and local wiring regulations. The device is connected according to the legally binding system circuit diagram.

CAUTION

Do not operate the MD15/230-HR, MD15/230-HE und MD15/230-DA Small Actuator electrically without a valve.

Installation: MD15/230-HR and MD15/230-HE

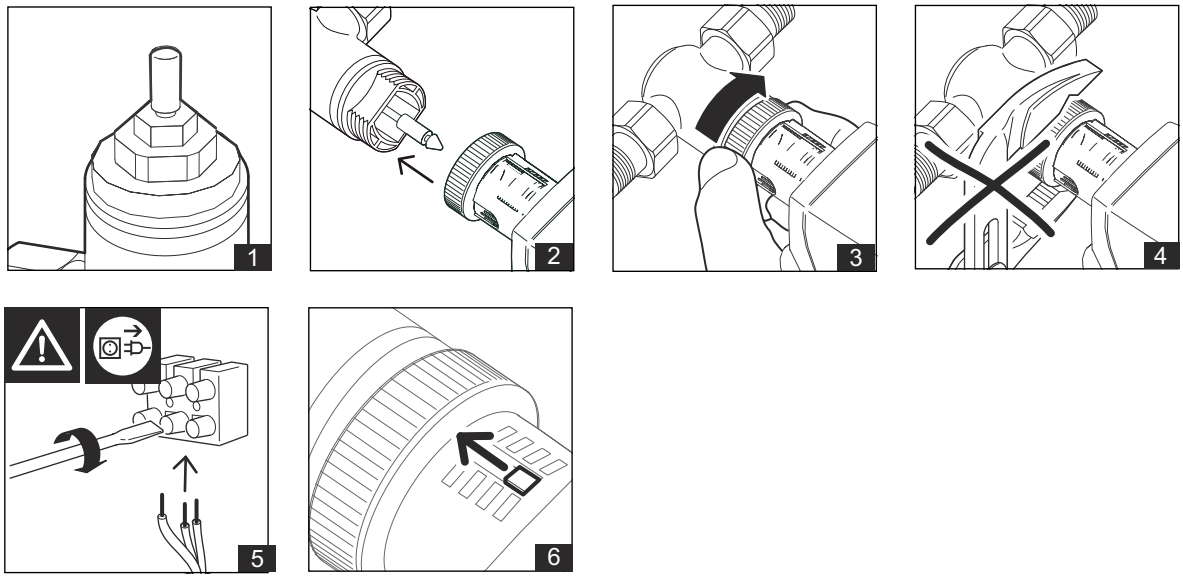

- Place the small actuator on the threaded connection of the valve and tighten hand-tight with the union nut.
- Establish the electrical connection.
- After the mains power supply has been switched on, an automatic initialization run takes place. The small actuator moves into upper end position. Adaptation of the valve takes place with the application of 230 V to lead "GN".

Installation: MD15/230-DA

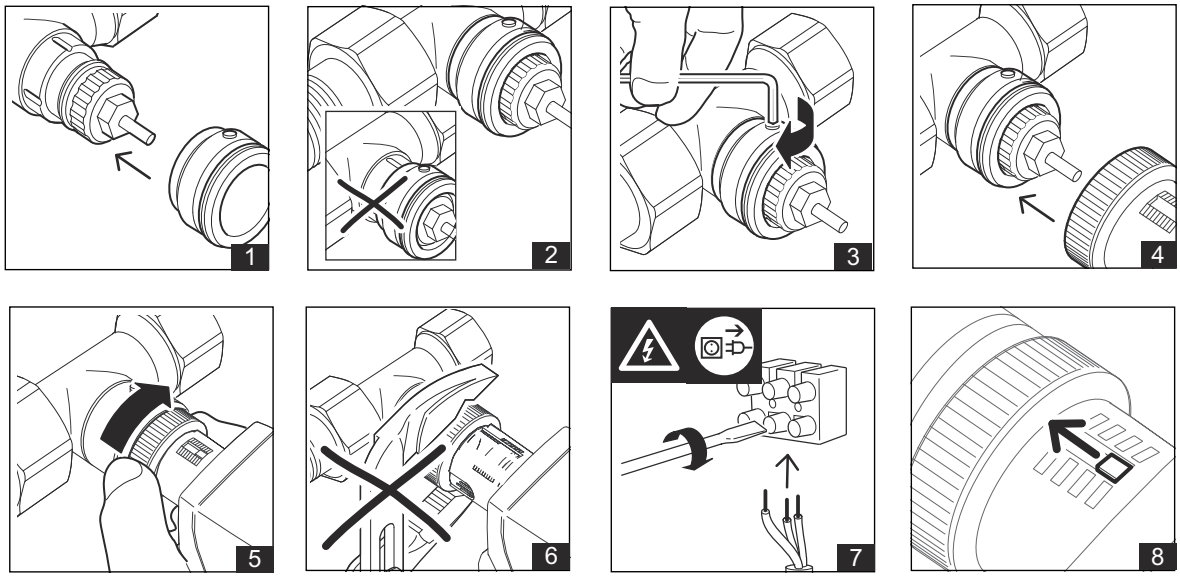

- Place the valve adapter onto the valve and tighten the hexagon socket screw.
- Place the small actuator on the threaded connection of the valve adapter and tighten hand-tight with the union nut.
- Establish the electrical connection.
- After the mains power supply has been switched on, an automatic initialization run takes place. The small actuator moves into upper end position. Adaptation of the valve takes place with the application of 230 V to the “GN” lead.

Removal of the Small Actuator

CAUTION

Before beginning to remove the unit, make sure that no differential pressure builds up in the valve body before beginning work. If necessary, close the gate valve and turn off pumps.

After the pipeline has cooled off, you can begin removal of the small actuator.

Removal: M15/230-HR and MD15/230-HE

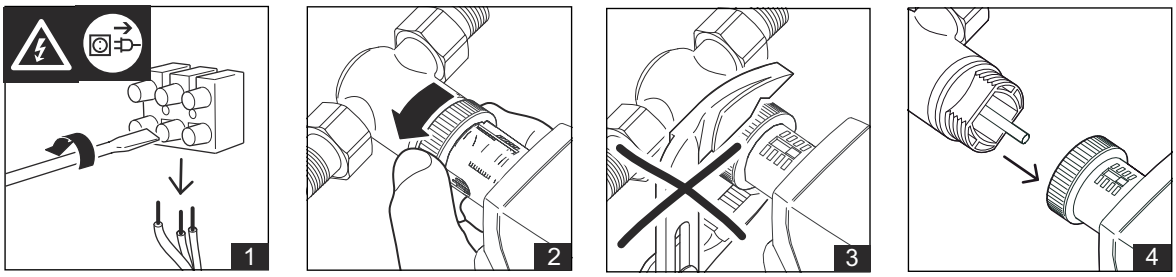

- Disconnect the small actuator from the mains power supply. Then disconnect all electrical connections.
- Remove the union nut.
- Remove the small actuator from the valve.

Removal: MD15/230-DA

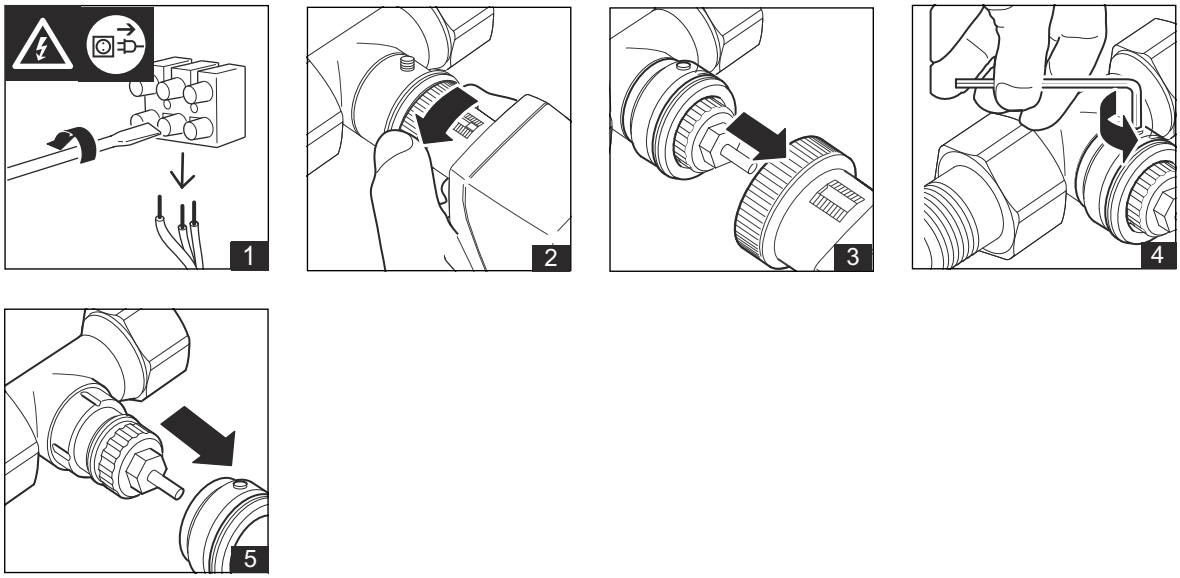

- Disconnect the small actuator from the mains power supply. Then disconnect all electrical connections.
- Remove the union nut.
- Remove the small actuator from the valve.
- Loosen the hexagon socket screw on the valve adapter.
- Remove the valve adapter.

Manual adjustment

CAUTION

Manual adjustment may only be performed when the actuator is installed.

- The small actuator must be disconnected from the mains power supply for manual operation.
- Using a hexagon key (key socket 4 mm), the actuator can be moved into any position.

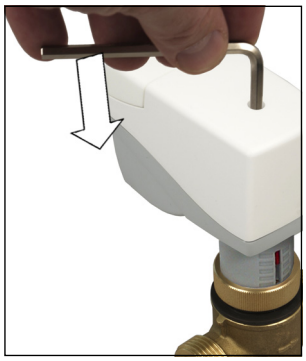

CAUTION

If you manually adjust until the slip clutch responds, turn the hexagon key half a turn in the opposite direction after the manually set stroke position has been reached.