M503Y/24, M503Y-60/24, M503Y/230, and M503Y-60/230 Actuators

with RV/RH/RVW/RHW80..150 two-way/three-way valves

Application

M503Y.. actuators, with an actuating force of 5,000 N, are used to finely adjust the position of valves.

A three-point or continuous signal is used for control, using either DC 0(2) to 10 V or 0(4) to 20 mA.

Änderungen vorbehalten - Contents subject to change - Sous réserve de modifications - Reservado el derecho a modificación - Wijzigingen voorbehouden - Con riserva di modifiche - Innehåll som skall ändras - Změny vyhrazeny - Zmiany zastrzeżone - Возможны изменения - A változtatások jogát fenntartjuk - 保留未经通知而改动的权力

Kieback&Peter GmbH & Co. KG
Tempelhofer Weg 50, 12347 Berlin/Germany
Telefon: +49 30 60095-0, Telefax: +49 30 60095-164
www.kieback-peter.de, info@kieback-peter.com

Content Page

Important Information Regarding Product Safety

Safety Instructions

This data sheet contains information on installing and commissioning the product "M503Y/24, M503Y-60/24, M503Y/230, M503Y-60/230". Each person who carries out work on this product must have read and understood this data sheet. If you have any questions that are not resolved by this data sheet, you can obtain further information from the supplier or manufacturer.

If the product is not used in accordance with this data sheet, the protection provided will be impaired.

Applicable regulations must be observed when installing and using the device. Within the EU, these include regulations regarding occupational safety and accident prevention as well as those from the VDE (Association for Electrical, Electronic & Information Technologies). If the device is used in other countries, it is the responsibility of the system installer or operator to comply with local regulations.

Mounting, installation and commissioning work on the devices may only be carried out by qualified technicians. Qualified technicians are persons who are familiar with the described product and who can assess given tasks and recognize possible dangers due to technical training, knowledge and experience as well as knowledge of the appropriate regulations.

Legend

WARNING

Indicates a hazard of medium risk which can result in death or severe bodily injury if it is not avoided.

CAUTION

Indicates a hazard of low risk which can result in minor or medium bodily injury if it is not avoided.

NOTICE

Indicates a hazard of medium risk which can result in material damage or malfunctions if it is not avoided.

NOTE

Indicates additional information that can simplify the work with the product for you.

Notes on Disposal

For disposal, the product is considered waste from electrical and electronic equipment (electronic waste) and must not be disposed of as household waste. Special treatment for specific components may be legally binding or ecologically sensible. The local and currently applicable legislation must be observed.

Item

M503Y/24	AC 24 V actuator with three-point or continuous control using either DC 0(2) V to 10 V or 0(4) mA to 20 mA for RV/RH80..100 two-way valves and for RVW/RHW80..100 three-way valves
M503Y-60/24	as with M503Y/24, but for RV/RH125..150 two-way valves and RVW/RHW125..150 three-way valves
M503Y/230	AC 230 V actuator with three-point or continuous control using either DC 0(2) V to 10 V or 0(4) mA to 20 mA for RV/RH80..100 two-way valves and for RVW/RHW80..100 three-way valves
M503Y-60/230	as with M503Y/230, but for RV/RH125..150 two-way valves and RVW/RHW125..150 three-way valves

Technical Data

Nominal voltage	M503Y/24, M503Y-60/24 M503Y/230, M503Y-60/230	AC 24 V ±10%; 50/60 Hz; 18 VA AC 230 V ± 10%; 50/60 Hz; 25 VA
Control	3-point signal (Open/Stop/Closed) or continuous control DC 0(2) V to 10 V or 0(4) mA to 20 mA; invertible	
Operating mode	S3-50% ED c/h 1200 EN 60034-1	
Hysteresis	Adjustable 0.05 V, 0.15 V, 0.3 V or 0.5 V	
Nominal stroke	M503Y/230; M503Y/24 M503Y-60/230; M503Y-60/24	50 mm max. 60 mm max.
Positioning feedback	DC 0 V to 10 V; 8 mA, invertible	
Manual mode	The feedback signal “R” can be used by turning the handwheel - with M503Y/24, M503Y-60/24 DC 24 V; 100 mA max. - with M503Y/230, M503Y-60/230 DC 24 V; 100 mA max.	
Travel time	Adjustable 2.5 s/mm or 5 s/mm	
Positioning force	5,000 N	
Ambient temp.	0 °C to +50 °C	
Degree of protection	IP54	
Installation position	Anywhere from vertical above the valve to a horizontal position	
Maintenance	Maintenance-free	
Weight	M503Y/24, M503Y-60/24 M503Y/230, M503Y-60/230	7.4 kg 8.6 kg

Accessories (not included in delivery)

HW-106923	2 voltage-free switches, path-dependently adjustable, AC 230 V max., 8 A; DC 30 V, 8 A

Dimensions

M503Y/xx

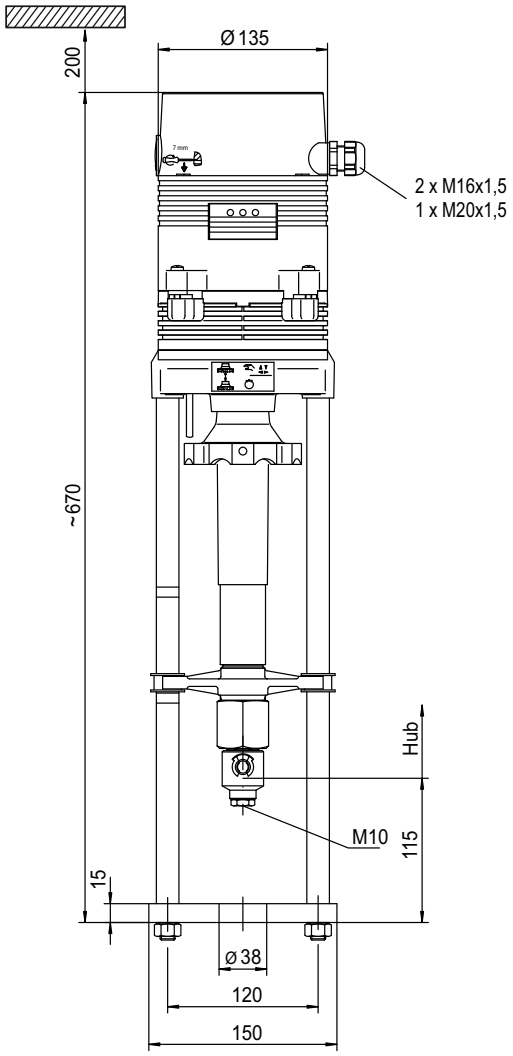

M503Y-60/xx

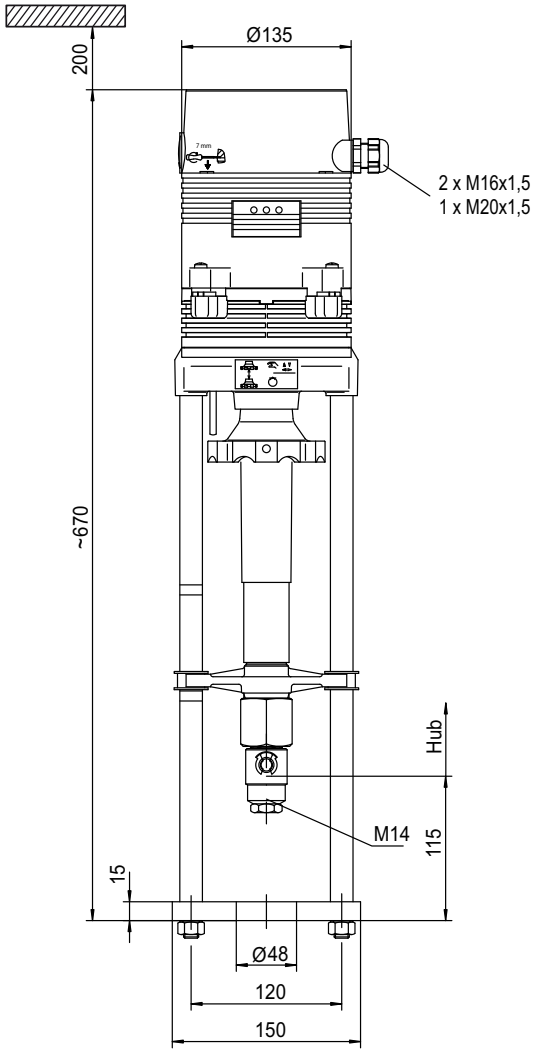

Installation

WARNING

Warning: Mains voltage AC 230 V.

Electrical installation and unit connection may only be carried out by qualified technicians.

The mains supply may only be connected after the electrical installation.
Be sure to comply with VDE guidelines and local wiring regulations.
The device is connected according to the obligatory wiring diagram.

Connection

- 3-point control

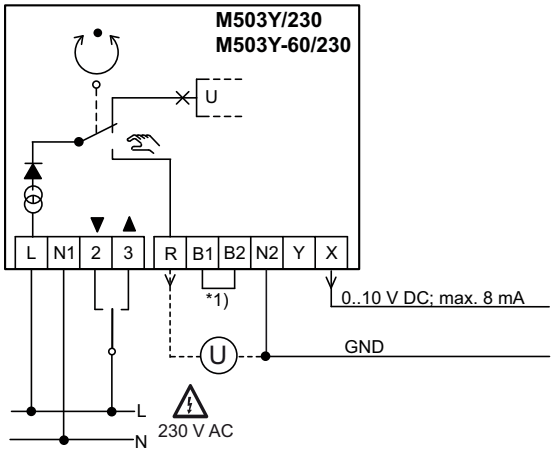

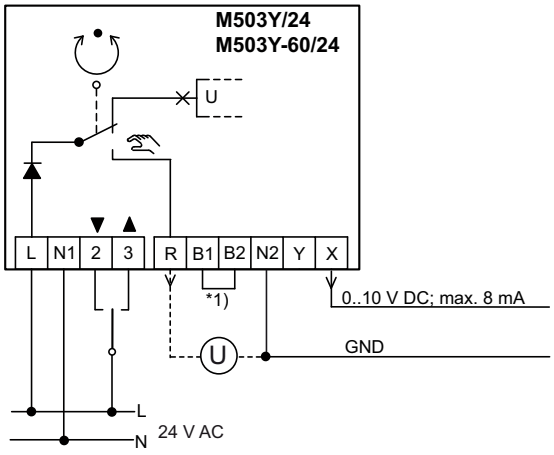

- Continuous control

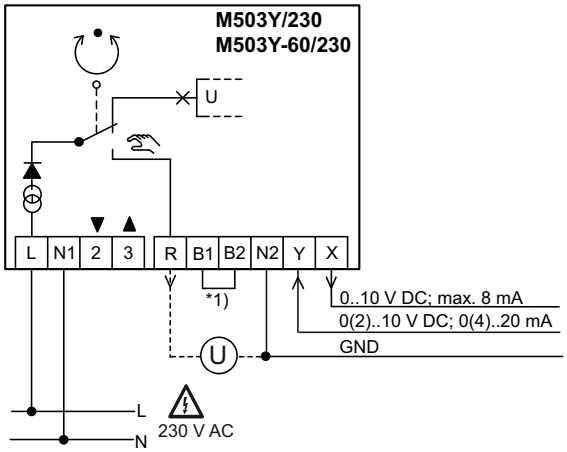

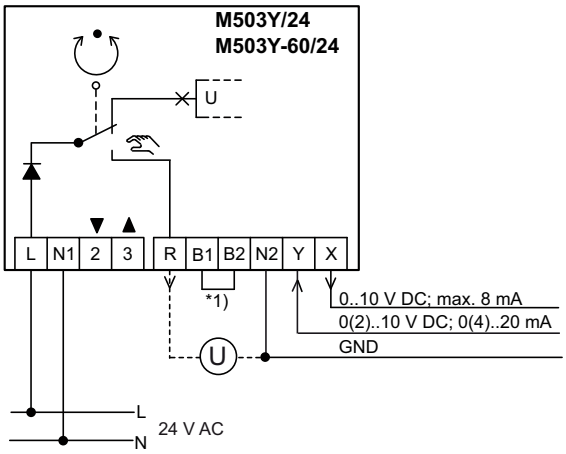

R Feedback signal for manual mode

*1) If the electricity supply between terminals B1 and B2 is interrupted, the actuator will move to the stop position pre-selected with code switch “S7”. This has priority over all other input signals and can be used for the frost protection/limiting function.

Anschluss Zubehör

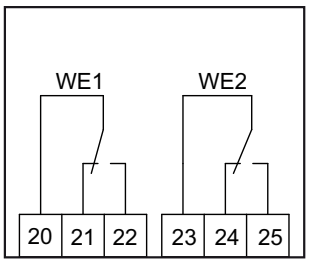

Manual/Automatic Mode

You can choose between manual or automatic modes by moving the handwheel.

If the handwheel is in the lower position (A), the actuator is in automatic mode.
(AUTO).

Manual mode (MAN) is activated by moving the handwheel to the upper position (B). Turn and push the handwheel until you feel it lock into position. The spindle nut can then be brought into the required position manually by turning the handwheel.

Terminal “R” emits feedback for “manual mode” when this is active.

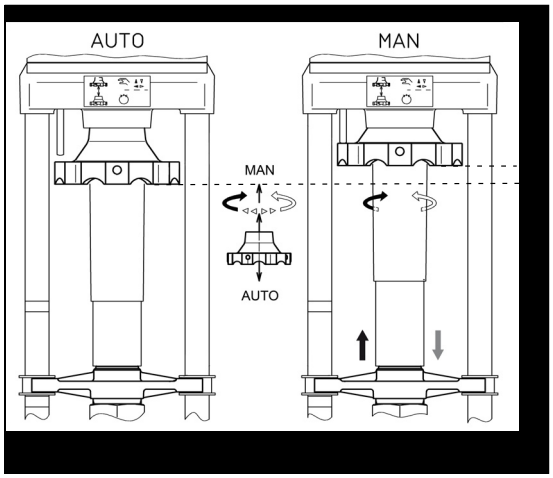

Removing and Replacing the Cover

- ► The cover must first be unlocked before it can be removed. Using a screwdriver, turn the dial (1) 90° counter-clockwise.
- ► Place the screwdriver into a notch on the cover and lift off the unlocked cover by turning it slightly.
- ► Carefully remove the cover.

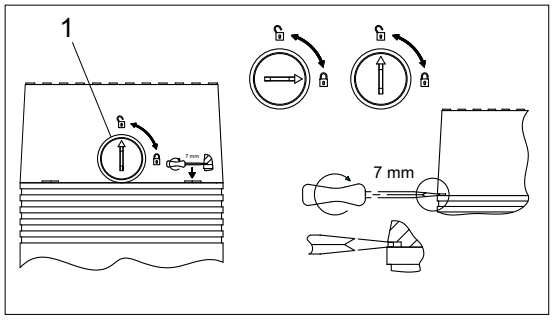

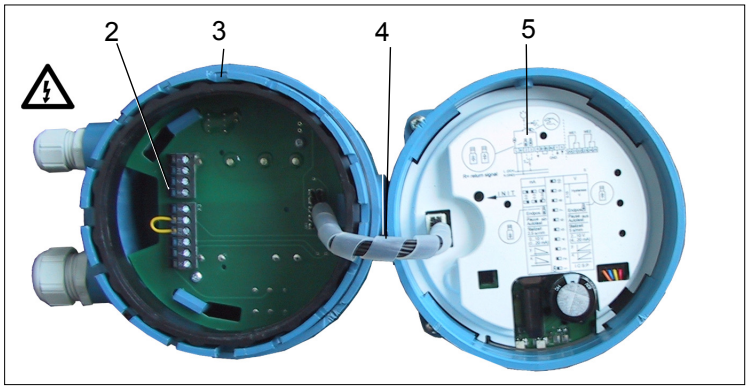

(2) Connection terminals
(3) Cover
(4) Cable connection with plug
(5) Main board

- Where applicable, remove the cable connection with plug (4) from the main board (5).

WARNING!

Ensure that the cover’s wiring is neither torn off nor damaged while removing the cover.
The device may only be commissioned or test run without the cover by qualified technicians.

- Before replacing the cover (3) re-connect the cable by inserting the plug. The plug connection is mechanically coded so that it can only be connected in the correct position.

- Replace the cover (3) by pressing it into place with moderate force. Turn the dial (1) on the cover clockwise (90°) to lock the cover into place.

NOTE

The cover can be mounted in four different positions, which are set at 90° from one another. This offers the advantage that the connecting cable can be routed conveniently for different installations of the actuator.

Additional Actuator Functions

Frost protection function

Should the temperature in the actuator drop below 15 °C during operating pauses, the motor switches to heating mode. The heating power is 12.5W with temperatures of approximately 8 °C to approx. 15 °C. The heating power will be increased to 18 W at temperatures below 8 C. If the actuator's temperature reaches approx. 22 °C, the heating mode switches off automatically. If the temperature drops again below 15 °C, the heating mode will be re-activated. Heating mode is indicated by a constantly lit, red LED.

Internal temperature monitoring in the actuator.

If the actuator overheats by reaching a temperature of more than approx. 84 °C, the power supply from the motor is cut. This is shown by a flashing light on the red LED, at intervals of approx. 0.25 seconds. When it has cooled down to approx. 78 °C, the motor will be supplied with power again.

RV80..150 Two-Way Valves with M503Y/24, M503Y-60/24, M503Y/230 and M503Y-60/230 Actuators

Application

Graphite cast-iron two-way valves RV80.150 with M503Y/24, M503Y-60/24, M503Y/230 and M503Y-60/230 actuating drives are used for fine quantity control of liquid and vapors.
A 3-point or a continuous control signal is used to control the activator, using either 0(2)..10 V DC or 0(4)..20 mA.

Types

RV80..150 graphite cast iron two-way valve with the M503Y/24, M503Y-60/24, M503Y/230 and M503Y-60/230 actuators for water up to 120 °C, 16 bar, as well as for hot water and steam up to 200 °C, 13 bar

DN	PN	kvs	Δp (bar)	Positioning time (s)	Weight (kg)	DN
RV80M503Y/24	80	16	100	8,5	125/250	37,4
RV80M503Y/230	80	16	100	8,5	125/250	38,6
RV100M503Y/24	100	16	160	5,0	125/250	49,4
RV100M503Y/230	100	16	160	5,0	125/250	50,6
RV125M503Y-60/24	125	16	250	2,9	150/300	68,4
RV125M503Y-60/230	125	16	250	2,9	150/300	69,6
RV150M503Y-60/24	150	16	400	1,9	150/300	100,4
RV150M503Y-60/230	150	16	400	1,9	150/300	101,6

Technical Data: RV80..RV150 Valves

Nominal diameter	DN 80 to 150
Pressure rating	PN 16
Connection	Flange in accordance with DIN 2533
Characteristic curve	Equal percentage
Nominal stroke	RV80..100: 50 mm; RV125..150: 60 mm
Leak rate	In accordance with EN 1349, seat leakage IV L1 (≤0.01% from kvs value)
Medium temperature	0 °C to 200 °C
Housing	Gray cast-iron EN-JL1040
Cone	CrNi steel 1.4057
Valve spindle	CrNo steel 1.4122
Spindle seal	PTFE lip seals

RV80..150 valve principle

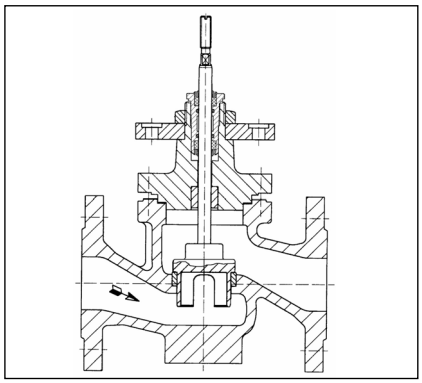

Dimensions

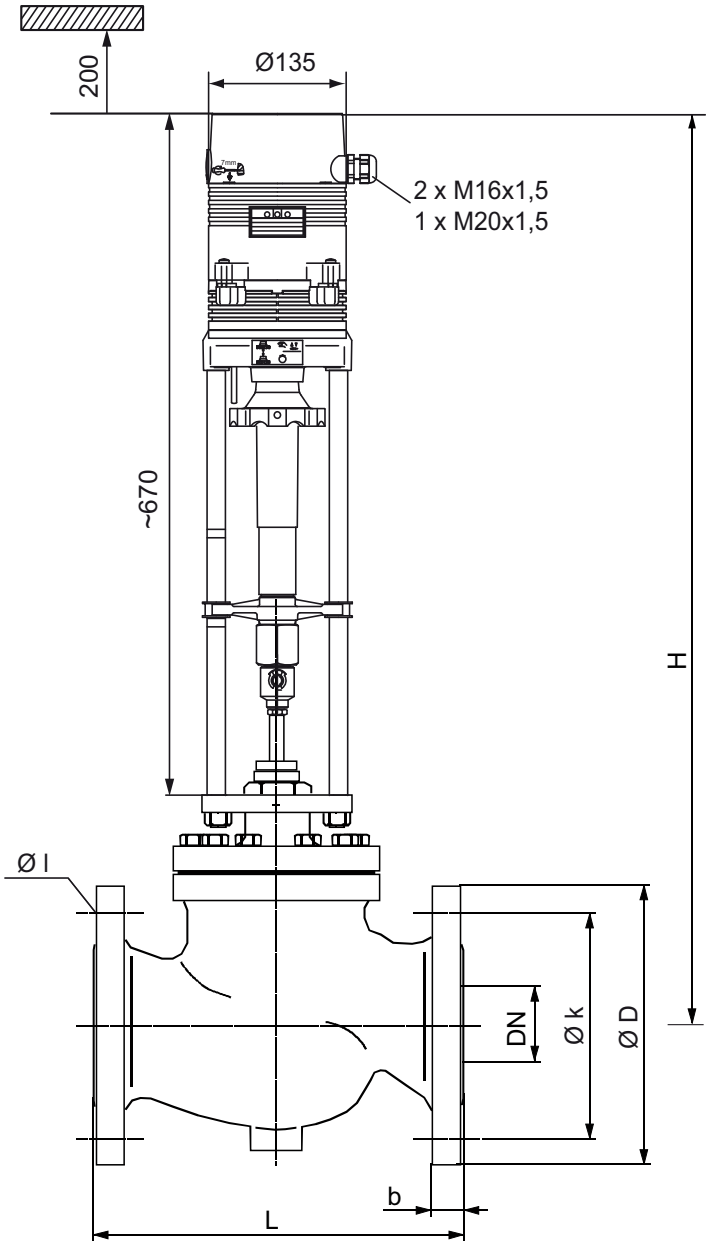

DN	L	b	Ø D	Ø k	Ø l	H
80	310	20	200	160	8 x Ø 18	860
100	350	22	220	180	8 x Ø 18	905
125	400	24	250	210	8 x Ø 18	930
150	480	24	285	240	8 x Ø 22	955
	Dimensions L to H in mm					

RH80..150 Two-Way Valves with M503Y/24, M503Y-60/24, M503Y/230, and M503Y-60/230 Actuators

Application

Graphite cast-iron two-way valves RH80..150 with M503Y-60/24, M503Y/230 M503Y-60/230 and M503Y-60/24 actuating drives are used for fine quantity control of liquid and vapor.
A 3-point or a continuous control signal is used to control the activator, either 0(2)..10 V DC or 0(4)..20 mA.

Types

RH80..150 graphite cast iron two-way valve with the M503Y-60/24, M503Y/230 M503Y-60/230 and M503Y-60/24 actuators for water up to 120 °C, 40 bar, as well as for hot water and steam up to 200 °C, 35 bar

	DN	PN	kvs	Δp (bar)	Positioning time (s)	Weight (kg)
RH80M503Y/24	80	40	100	8,5	125/250	45,4
RH80M503Y/230	80	40	100	8,5	125/250	46,6
RH100M503Y/24	100	40	160	5,0	125/250	60,4
RH100M503Y/230	100	40	160	5,0	125/250	61,6
RH125M503Y-60/24	125	40	250	2,9	150/300	74,4
RH125M503Y-60/230	125	40	250	2,9	150/300	75,6
RH125M503Y-60/24	150	40	400	1,9	150/300	109,4
RH150M503Y-60/230	150	40	400	1,9	150/300	110,6

Technical Data: RH80..150 Valves

Nominal diameter	DN 80 to 150
Pressure rating	PN 40
Connection	Flange in accordance with DIN 2545
Characteristic curve	Equal percentage
Nominal stroke	RH80..100: 50 mm; RH125..150: 60 mm
Leak rate	In accordance with EN 1349, seat leakage IV L1 (≤0.01% from kvs value)
Medium temperature	0 °C to 200 °C
Housing	Graphite cast-iron 1.0616+N
Seat ring	CrNi steel 1.4057
Cone	CrNi steel 1.4057
Valve spindle	CrMo steel 1.4122
Spindle seal	PTFE lip seals

RH80..150 **valve principle**

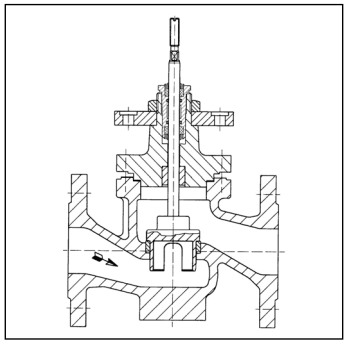

Dimensions

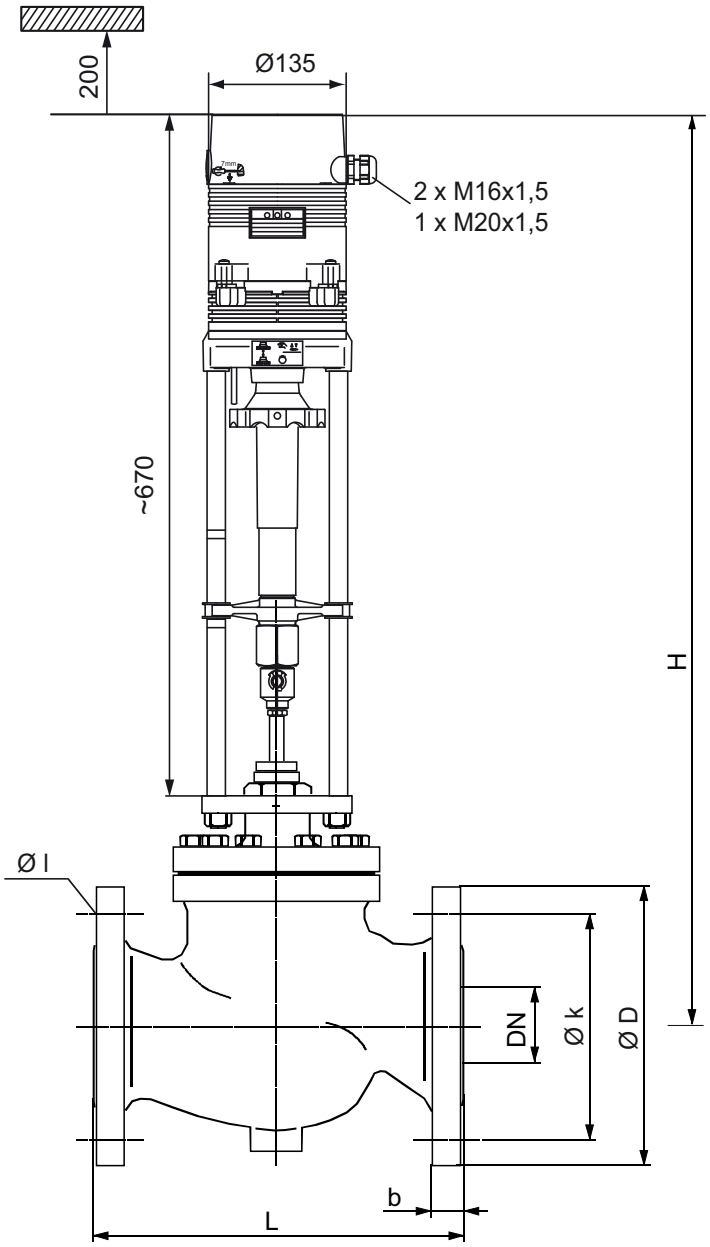

DN	L	b	Ø D	Ø k	Ø l	H
80	310	24	200	160	8 x Ø 18	860
100	350	24	235	190	8 x Ø 22	905
125	400	26	270	220	8 x Ø 26	930
150	480	28	300	250	8 x Ø 26	955
	Dimensions L to H in mm					

RVW80..150 Three-Way Valves with M503Y/24, M503Y-60/24, M503Y/230, and M503Y-60/230 Actuators

Application

Graphite cast-iron two-way valves RH80..150 with M503Y/24, M503Y-60/24, M503Y/230 und M503Y-60/230 actuating drives are used for fine quantity control of liquid and vapor.
A 3-point or a continuous control signal is used to control the activator, either 0(2)..10 V DC or 0(4)..20 mA.

Types

RH80..150 graphite cast iron two-way valve with the M503Y/24, M503Y-60/24, M503Y/230 and M503Y-60/230 actuators for water up to 120 °C, 40 bar, as well as for hot water and steam up to 200 °C, 35 barr

	DN	PN	kvs	Δp (bar)	Positioning time (s)	Weight (kg)
RVW80M503Y/24	80	16	100	8,5	125/250	41,4
RVW80M503Y/230	80	16	100	8,5	125/250	42,6
RVW100M503Y/24	100	16	160	5,0	125/250	52,4
RVW100M503Y/230	100	16	160	5,0	125/250	53,6
RVW125M503Y-60/24	125	16	250	2,9	150/300	80,4
RVW125M503Y-60/230	125	16	250	2,9	150/300	81,6
RVW150M503Y-60/24	150	16	400	1,9	150/300	113,4
RVW150M503Y-60/230	150	16	400	1,9	150/300	112,6

Technical Data: RVW80..RVW150 Valves

Nominal diameter	DN 80 to 150
Pressure rating	PN 16
Connection	Flange in accordance with DIN 2533
Characteristic curve	A→AB same percentage; B→AB linear
Nominal stroke	RVW80..100: 50 mm; RVW125..150: 60 mm
Leak rate	In accordance with EN 1349, seat leakage IV L1 (≤0.01% from kvs value)
Medium temperature	0 °C to 200 °C
Housing	Gray cast-iron EN-JS1040
Cone	CrNi steel 1.4057
Valve spindle	CrMo steel 1.4122
Spindle seal	PTFE lip seals

RVW80..RVW150 **valve principle**

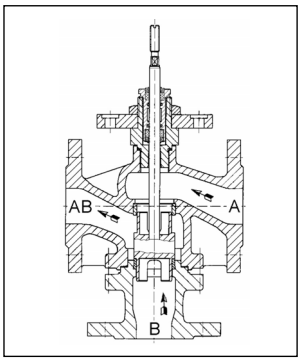

Dimensions

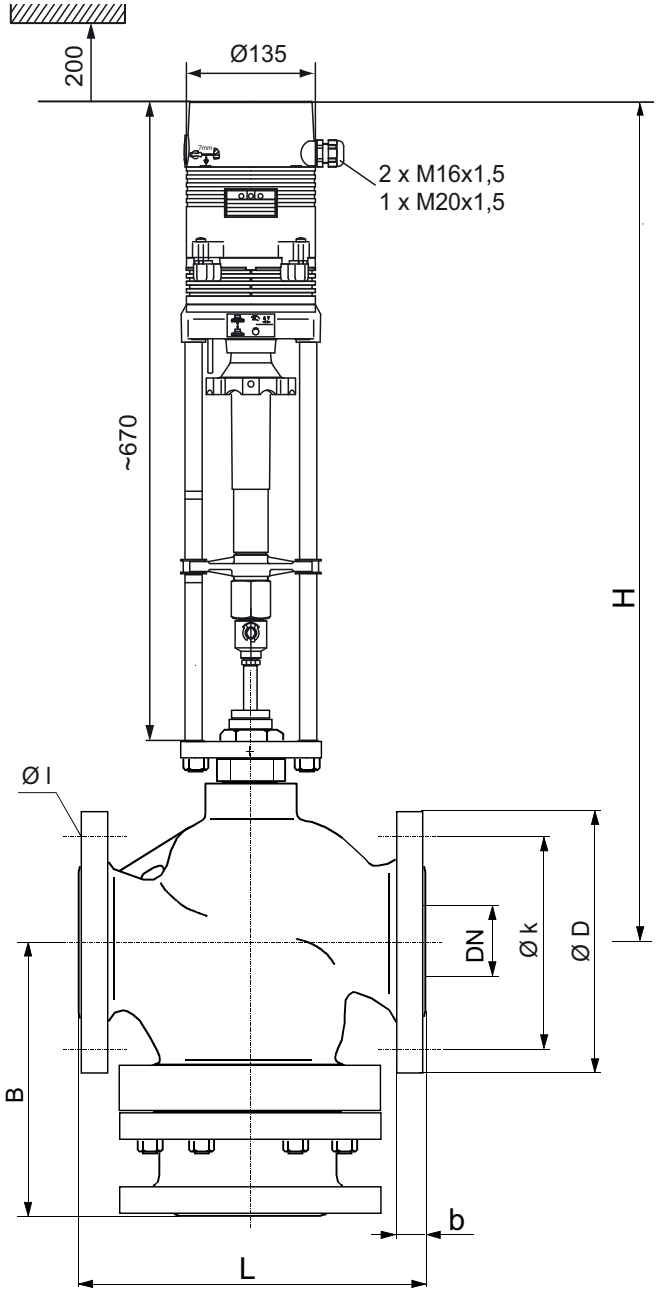

DN	L	B	b	Ø D	Ø k	Ø l	H
80	310	215	20	200	160	8 x Ø 18	840
100	350	215	22	220	180	8 x Ø 18	870
125	400	260	24	250	210	8 x Ø 18	875
150	480	280	24	285	240	8 x Ø 22	895
	Dimensions L to H in mm						

RHW80..150 Three-Way Valves with M503Y/24, M503Y-60/24, M503Y/230, and M503Y-60/230 Actuators

Application

Graphite cast-iron three-way valves RVW80 ..150 with M503Y/24, M503Y-60/24, M503Y/230 and M503Y-60/230 actuating drives are used for fine quantity control of liquid and vapor
A 3-point or a continuous control signal is used to control the activator, either 0(2)..10 V DC or 0(4)..20 mA.

Types

RVW80..150 cast graphite iron three-way valve with the M503Y/24, M503Y-60/24, M503Y/230 and M503Y-60/230 actuators for water up to 120 °C, 16 bar, as well as for hot water and steam up to 200°C, 13 ba

	DN	PN	kvs	Δp (bar)	Positioning time (s)	Weight (kg)
RHW80M503Y/24	80	40	100	8,5	125/250	52,4
RHW80M503Y/230	80	40	100	8,5	125/250	53,6
RHW100M503Y/24	100	40	160	5,0	125/250	65,4
RHW100M503Y/230	100	40	160	5,0	125/250	66,6
RHW125M503Y-60/24	125	40	250	2,9	150/300	86,4
RHW125M503Y-60/230	125	40	250	2,9	150/300	87,6
RHW150M503Y-60/24	150	40	400	1,9	150/300	128,4
RHW150M503Y-60/230	150	40	400	1,9	150/300	129,6

Technical Data: RHW80..RHW150 Valves

Nominal diameter	DN80 to 150
Pressure rating	PN 40
Connection	Flange in accordance with DIN 2545
Characteristic curve	A→AB same percentage; B→AB linear
Nominal stroke	RHW80..100: 50 mm RHW125..150: 60 mm
Leak rate	In accordance with EN 1349, seat leakage IV L1 (≤0.01% from kvs value)
Medium temperature	0 °C to 200 °C
Housing	Graphite cast-iron 1.0619+N
Seat ring	CrNi steel 1.4021
Cone	CrNi steel 1.4057
Valve spindle	CrMo steel 1.4122
Spindle seal	PTFE lip seals

RHW80..150 **valve principle**

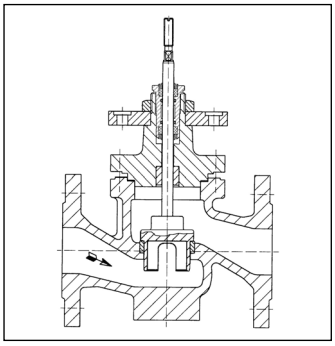

Dimensions

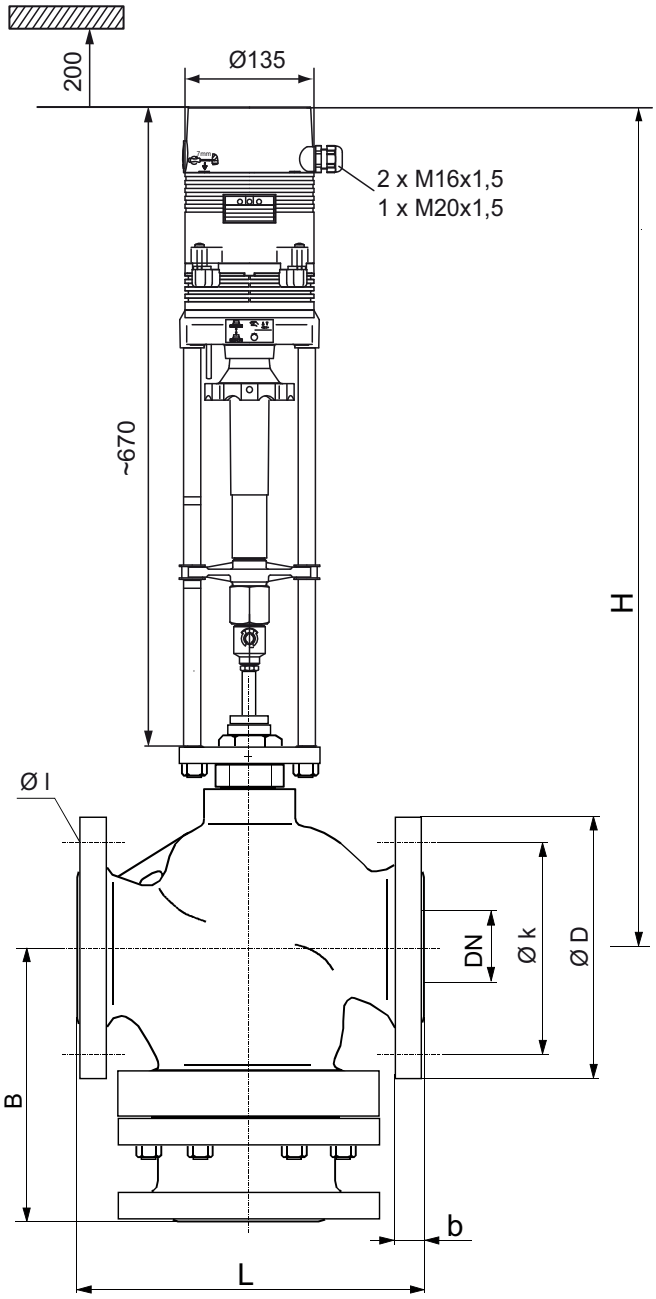

DN	L	B	b	Ø D	Ø k	Ø l	H
80	310	215	24	200	160	8 x Ø 18	840
100	350	215	24	235	190	8 x Ø 22	870
125	400	260	26	270	220	8 x Ø 26	875
150	480	280	28	300	250	8 x Ø 26	895
	Maße L bis H in mm						

Valve Installation

NOTICE

The valve may only be installed by qualified technicians. In addition to the generally valid installation guidelines, the following points are to be observed:

- The valve ports come with protective caps to protect against contamination. They are to be removed before installing the valves.
- The pipeline system and the fixture interior must be free of foreign objects. In the case of contaminated media, dirt collectors are to be inserted upstream of the valves.
- There must be no tension between the valve and the pipeline connection.
- Use only perfectly fitting flange seals, inserted centrally in the valve flanges.
- To avoid eddy formations in the valve body, the valve should be installed in a straight section of the pipe. A distance of 10 times the nominal diameter is recommended between the valve flange and manifold or other similar parts.
- The installation location is to be selected so that the ambient temperature at the actuator is kept between -10.. +50 °C.
- When carrying out installation, the permissible max. pressure difference Δp and the specified direction of flow must be taken into account (see table in "Types" section, as well as the "Valve Principle").
- Insert the three-way valves as mixing valves. Pay attention to the direction of flow (see fig. "Valve Principle").
- The actuator can be installed vertically above the fixture, or in any position as far as a horizontal position. When installed horizontally, the drive pillars must be one upon the other. Where applicable, turn the cross member after loosening the retaining nut.
- To remove the actuator hood, approx. 200 mm of free space is required above the drive.
- The actuator is delivered with a protective box. Up until commissioning, this cover protects the drive during the installation phase and pipeline work.
- Observe the direction arrow on the valve body! Inverting the direction of flow impairs control behavior.

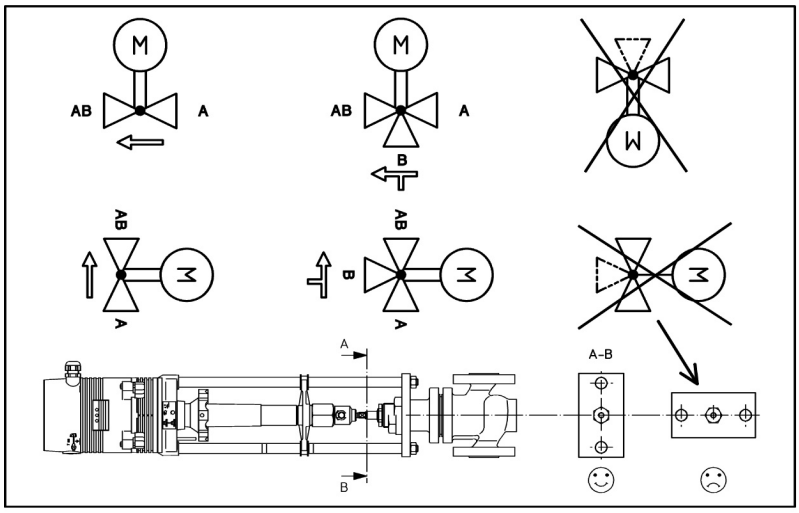

Actuator Installation

WARNING

Installation may only be carried out by qualified technicians.

If the valve is installed in the system, make sure that no differential pressure builds up in the valve body before beginning work. If necessary, close the gate valve and turn off pumps.After the pipeline has cooled off, the actuator can be installed.

- Detach the plug-in plate (3), pull out or carefully force out the bolt (5) from the coupling piece (4).
- Place the actuator with the cross member (9) onto the valve nozzle and secure with a flat hex nut (10).
- Unscrew the flat hex nut M10 (7) from the valve spindle (6). Unscrew the coupling piece (4) from the valve spindle (6).
- Push the actuator into manual mode (MAN) (see page 8).
- Using the handwheel (1), adjust the height of the spindle nut so that the bolt (5) can be reattached. Pay attention while connecting the plug-in plate (3).
- Secure the flat hex nut (7) to ensure that the valve spindle does not get twisted.
- Put the actuator into automatic mode (see page 8)
- The actuator is uninstalled in reverse order.

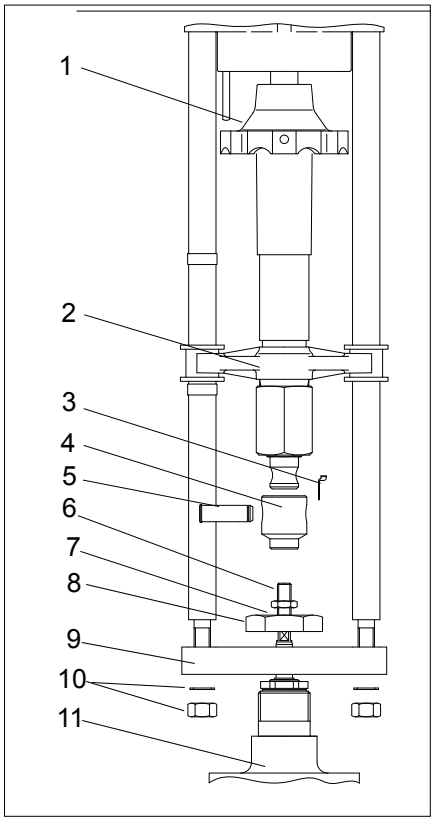

Commissioning

WARNING

Warning: Mains voltage AC 230 V.

Only qualified technicians may connect the device and switch on the power supply.

- Before switching on the power, check that the valve and the electrical connection are installed correctly.
- Check the loop controller and actuating direction (open/close valve).

Valve Functions

Two-way valve open

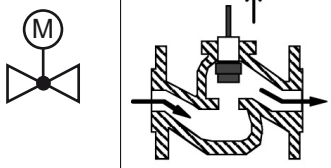

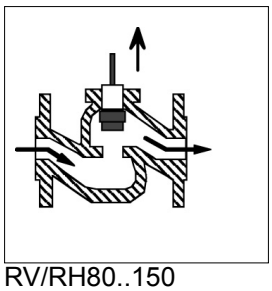

RV/RH80..150

Two-way valve closed

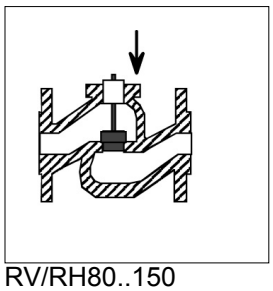

RV/RH80..150

Three-way valve
Gates A - AB closed
B - AB open

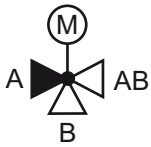

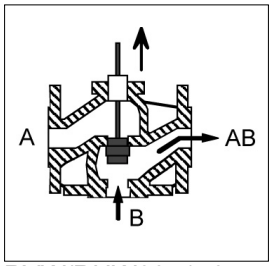

RVW/RHW80..150

Three-way valve
Gates A - AB open
B - AB closed

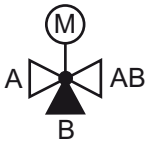

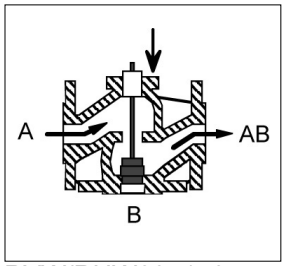

RVW/RHW80..150

Actuating direction when delivered		
R..M503Y/24 R..M503Y-60/24 R..M503Y/230 R..M503Y-60/230	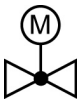	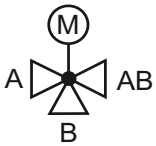
Control voltage Y = DC 0 V	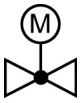	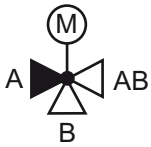
Control voltage Y = DC 10 V		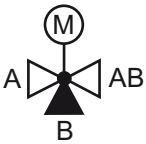
◁ = Gate open ◀ = Gate closed		

Initialization and Adjustment to the Valve Stroke

For commissioning or following repair work on the valve or actuator or when the valve or actuator has been replaced, the valve stroke must be initialized.

Pressing the INIT button (1) on the main board or applying operating voltage to terminals "2" and "3" simultaneously triggers initialization.

Keep the INIT button pressed for at least 1 second (holding period), or keep terminals "2" and "3" supplied with operating voltage for at least 1 second. The end positions are approached during initialization.

The actuator also initializes following an interruption of the power supply or after switching from manual to automatic mode.

Using the code switch "S7", select the end position to be moved.

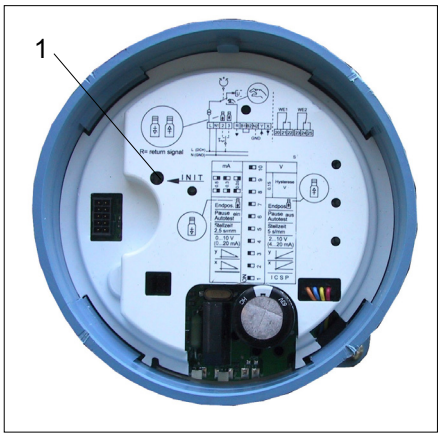

NOTE

Following initialization, the actuator will move into the position specified by the controller.

Setting the code switches

The actuator functions can be adjusted by using the code switches (3) "S1" to "S10" (situated under the main board cover). To set the functions, remove the cover (2) from the main board (4).

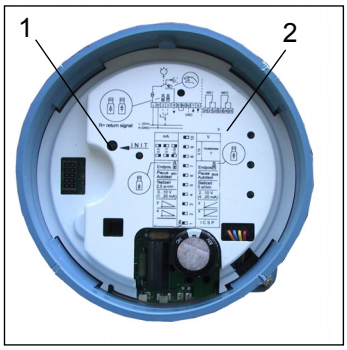

Fig. Main board with cover

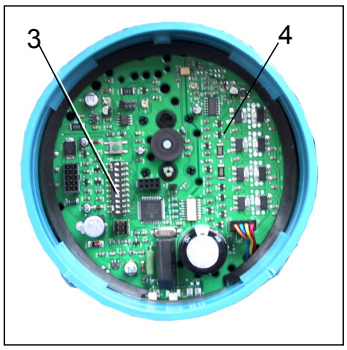

Fig. Main board without cover

(1) INIT - button
(2) Main board cover
(3) Code switches S1 to S10
(4) Main board

Funktion	Kodier-schalter	Funktion
mA	10	V
0,5 0,3 0,05	9 8	0,15 Hysteresse V
Endpos.	7	Endpos.
Pause Autotest ein	6	Pause Autotest aus
Stellzeit 2,5 s/mm	5	Stellzeit 5 s/mm
0...10 V (0...20 mA)	4	2..10 V (4...20 mA)
y	3	y
x	2	x
	ON 1	ICSP

- The code switch "S1" must always be in the "ON" position to ensure operation.
- Code switch "S6" ("ON") auto-test and auto-pause function.

Auto-test The stop position that was set with code switch "S7" is approached in rapid speed mode every ten days. This simultaneously also effects a zero adjustment. This also significantly reduces the risk of the valve or valve spindle becoming jammed as a result of corrosion when the machine is not used for a longer period of time.

Auto-pause The actuator counts the motion commands that would mean a shift in direction. If there are more than 20 such motion commands per minute, the device executes a mandatory break of 3 seconds is made. The measuring cycle is 2 minutes long.

- Code switch “S7” actuator spindle stop position


Extended actuator spindle


Retracted actuator spindle

By setting the code switch “S7”, you can select the stop position, which is approached in the following situations:

- Open circuit detection of the Y signal
- A binary signal (an interruption of the circuit between terminals “B1” and “B2”)
- Initialization, the pre-set position is approached first

Status LEDs

(1) Status-LED 1 (green)
(2) Status LED 2 (red)

Status LED 1 (green)

Normal operation (stand-by)
The LED is lit constantly, actuator awaits a motion command.

Normal operation (actuator executes motion command)
The LED flashes in a short – short rhythm.

Open circuit detection
The input signal is only checked for an open circuit in the operating modes 2..10 V DC and 4 20 mA (live zero). This means the actuator spindle is moved to the pre-selected stop position, as set with code switch "S7", if the input signal is lower than 1 V or 2 mA. The LED flashes in a short – long rhythm.

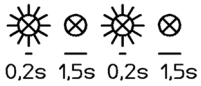

Blockage (only with continuous control)
The actuator has a blockage safety system. In the event of a mechanical blockage, the actuator moves backward and then tries to override the blockage (seven attempts in total). Should it not be able to override the blockage, the actuator turns off automatically. This ensures that no further damage can happen to the actuator and valve. In the event of blockage, the LED flashes in a long – long rhythm.

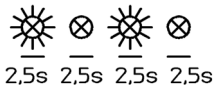

Constant signal
Behavior with constant signal on terminal "2+3". An initialization run takes place upon simultaneous control signals on terminal "2+3". If the signal on terminal "2+3" is constant (perhaps as a result of the controller's relay contact becoming stuck), the actuator will execute a maximum of four initialization runs before switching itself off. With a constant signal on terminal "2+3", the off-position is indicated by the LED, in this case with a long – short rhythm.After clearing the constant signal on terminal "2+3", the actuator automatically returns to normal operating mode.

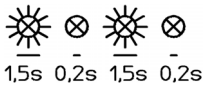

Reset after a malfunction

After resolving a malfunction, the actuator can be reset in the following ways:

- Briefly disconnect the actuator from the power supply
- Apply the operating voltage “L” to terminals “2” and “3” simultaneously (1 s - 5 s)
- Briefly turn the manual adjustment on and off again
- Press the INIT button

Status LED 2 (red)

Heating mode	On
Temperature in normal operating mode	Off
Actuator is overheated	0,25s 0,25s 0,25s 0,25s Flashing