DDC110S Room Control Module

Application

The bus-capable DDC110S room control module with LCD display is used as part of the DDC3000 and DDC4000/BMR automation system and measures the room temperature.

The module is equipped with four function buttons for adjusting the setpoint and a timer function (for forced switching in day control mode). The room control module also has an input for connecting a window contact or a presence detector.

The fieldbus is used to transmit data to the DDC controller.

Contents Page

Important Information Regarding Product Safety 2
Item 3
Technical Data 3
Dimensions 3
Connection 4
Mounting and Installation 4
Operation 6

Änderungen vorbehalten - Contents subject to change - Sous réserve de modifications - Reservado el derecho a modificación - Wijzigingen voorbehouden - Con riserva di modifiche - Innehåll som skall ändras - Změny vyhrazeny - Zmiany zastrzeżone - Возможны изменения - A változtatások jogát fenntartjuk - 保留未经通知而改动的权力

Kieback&Peter GmbH & Co. KG
Tempelhofer Weg 50, 12347 Berlin/Germany
Telefon: +49 30 60095-0, Telefax: +49 30 60095-164
www.kieback-peter.de, info@kieback-peter.com

Important Information Regarding Product Safety

Safety Instructions

This data sheet contains information on installing and commissioning the product "DDC110S Room Control Module". Each person who carries out work on this product must have read and understood this data sheet. If you have any questions that are not resolved by this data sheet, you can obtain further information from the supplier or manufacturer.

If the product is not used in accordance with this data sheet, the protection provided will be impaired.

Applicable regulations must be observed when installing and using the device. Within the EU, these include regulations regarding occupational safety and accident prevention as well as those from the VDE (Association for Electrical, Electronic & Information Technologies). If the device is used in other countries, it is the responsibility of the system installer or operator to comply with local regulations.

Mounting, installation and commissioning work on the devices may only be carried out by qualified technicians. Qualified technicians are persons who are familiar with the described product and who can assess given tasks and recognize possible dangers due to technical training, knowledge and experience as well as knowledge of the appropriate regulations.

Meaning of the Symbols

WARNING

Indicates a hazard of medium risk which can result in death or severe bodily injury if it is not avoided.

CAUTION

Indicates a hazard of low risk which can result in minor or medium bodily injury if it is not avoided.

NOTICE

Indicates a hazard of medium risk which can result in material damage or malfunctions if it is not avoided.

Note

Indicates additional information that can simplify the work with the product for you.

Notes on Disposal

For disposal, the product is considered waste from electrical and electronic equipment (electronic waste) and must not be disposed of as household waste. Special treatment for specific components may be legally binding or ecologically sensible. The local and currently applicable legislation must be observed.

Item

DDC110S	Room control module with LCD screen for automation and control system DDC3000 and DDC4000/BMR

Technical Data

Nominal voltage	DC 12 V ±20%; max. 25 mA
Input	Normally open K1 contact, potential-free (i.e. can be configured as a window contact/presence detector in the automation and control system DDC3000 and DDC4000/BMR)
Function	Measuring the room temperature, with setpoint adjustment and pushbutton function
Measured variable	Room temperature of spaces in homes or commercial premises
Measuring system	Digital sensor
Measuring range	0 to 99 °C
LCD screen	- Room temperature actual value 0 to 99 °C, resolution 0.1 K - Room temperature setpoint 0 to 99 °C, resolution 0.5 K - setpoint adjustment, can be shown or hidden (Setting ± 5 K, adjustment range configurable in 0.5 K intervals) - Timer function (switching to day mode), can be hidden (Setting 0 to 4 hrs. in 0.5 h intervals) - Symbol displays to show day/night operating modes
Operating elements	4 buttons for selecting functions and settings on the display setpoint adjustment and timer function
Interfaces	CAN; fieldbus max. 2000 m; 20 kBd
Housing	Plastic housing, cover color: RAL 9010 (pure white) Other colors available on request
Degree of protection	IP30
Ambient temperature	0 to 45 °C
Ambient humidity	20 to 80% r.h., non-condensing
Weight	100 g
Dimensions	WxHxD: 82.5 x 82.5 x 28.3 mm

Dimensions

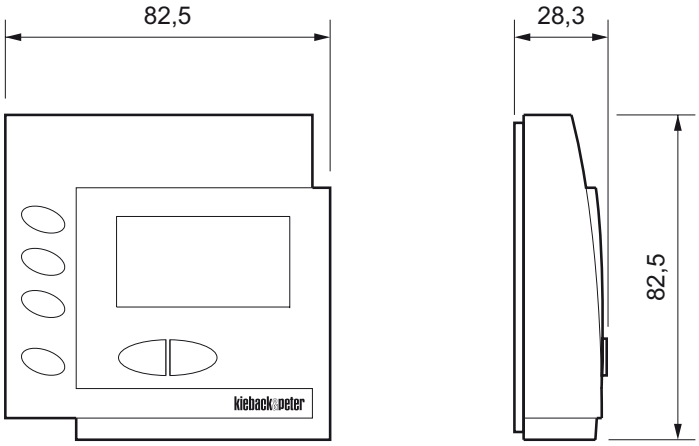

Connection

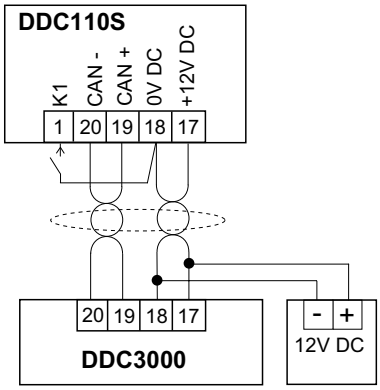

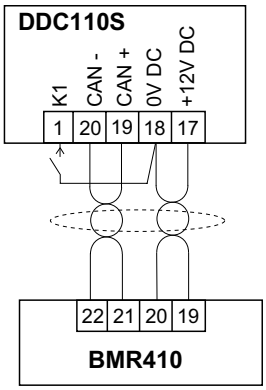

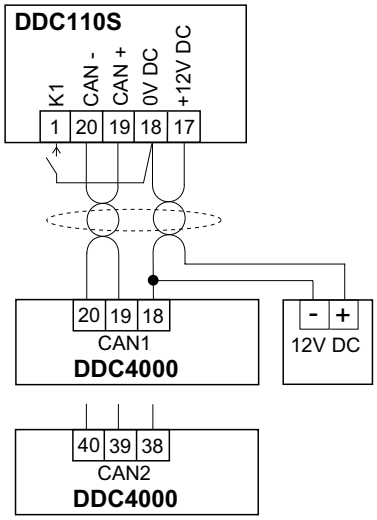

Mounting and Installation

The room control module can be mounted on the wall or onto a flush-mounted box.

The room control module should be installed in a location where it is exposed to the air circulation in the room so that it can quickly and accurately measure the room temperature.

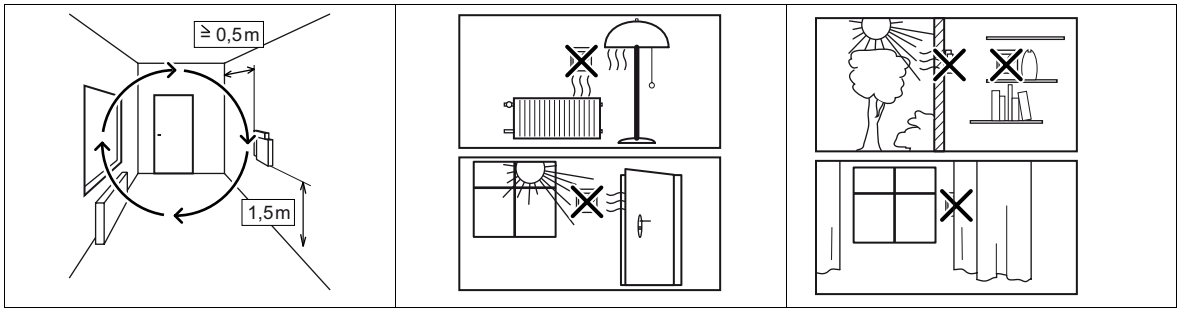

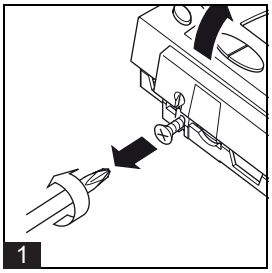

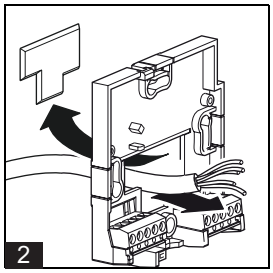

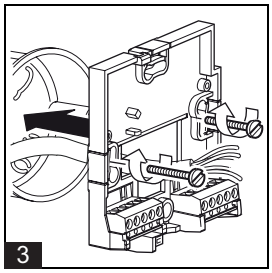

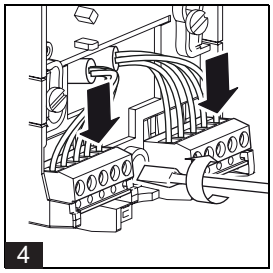

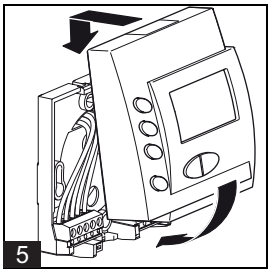

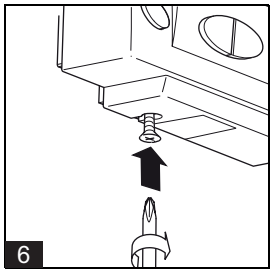

- Lines for the power supply and fieldbus should be laid together in one shielded cable, cable type at least 0.8 mm in diameter, with the wires twisted together in pairs. Here, one twisted pair of wires is to be used for the power supply and another for the fieldbus (see wiring diagram).
- At the end of the fieldbus (furthest point from the DDC controller, max. 2000 m), the two connection lines must be fitted with a terminating resistor of about 180 Ω (terminating resistor is included with the DDC controller).

Setting the address

Address settings: 01 to 63

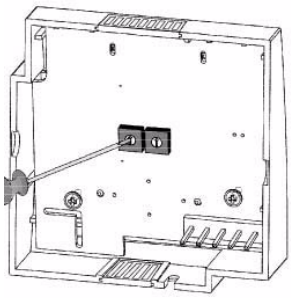

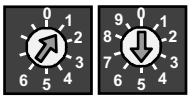

x 10 x 1

Example: 15

Protective cover

The packaging box serves as a protective cover for the construction phase. Fold the side flaps inward and tear off the lid of the box.

Operation

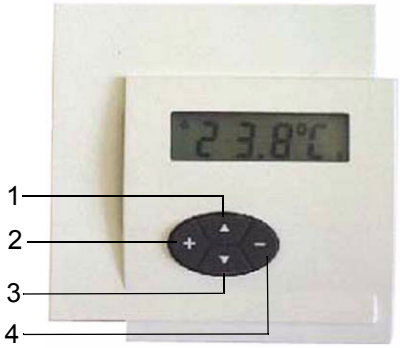

Use the arrow buttons (1) or (3) to select a function, i.e. **actual value, setpoint**, **setpoint adjustment**, **time,** or **timer**.

You can use the "**+**" button (2) or the "**-** " button (4) to set the selected function, **setpoint adjustment** or **timer**.

Display example:

Actual value	20.4 °C	(solid decimal value)
setpoint	20.5 °C	(decimal point flashes)
setpoint adjustment	0.5	(decimal point flashes)
Time	13.23	
Timer	2.0 h	(decimal point flashes)

The timer function forces the control to switch to day mode. The timer setting is also displayed on the display with 1 to 3 points positioned above one another, i.e. 2.0 h ■ (≤ 2 h = 1 point, 2 to 3 h = 2 points, > 3 h = 3 points).

Symbol display:

☼	Day mode
☾	Night mode
○	Bus malfunction

Note

setpoint adjustment and the timer function are hidden using parameterization.